Baldor Drives and Capabilities

CA769
Effective Date:
December, 2009

BALDOR®

TABLE OF CONTENTS

Baldor V*S Drives
- General Purpose VS1 Drive Selection Chart (ST, MD, MX, PF, SP, GV) . . . 1
- Special Purpose VS1 Drive Selection Chart (PM, CTD, SD, STS, MXS, SM, PFS) . . . 2
- VS1 Part Numbers . . . 3

Drive Center Design / Lab Capabilities
- Test Capabilities . . . 4

VS1 Microdrives
- VS1MD . . . 9
- VS1MD Options . . . 11
- VS1ST . . . 14
- VS1MX . . . 17
- VS1ST / VS1MX Accessories and Options . . . 22
- VS1STS . . . 26
- VS1MXS . . . 28
- VS1STS / VS1MXS Accessories and Options . . . 30
- VS1SM . . . 31

VS1 Pump and Fan Drives
- VS1PF . . . 33
- VS1PFS . . . 39
- VS1PF Accessories . . . 40
- VS1PF Bypass Panels (VS1PFB) . . . 45
- VS1PF Packaged Drives . . . 48

VS1 High Performance Drives (H2 Technology)
- VS1SP . . . 53
- VS1SP Packaged Drives . . . 57
- VS1GV . . . 64
- VS1GV Packaged Drives . . . 68
- VS1SD . . . 74
- VS1PM . . . 76
- VS1SP / VS1GV / VS1SD / VS1PM Drive Dimensions and Weights . . . 78
- VS1SP / VS1GV / VS1SD / VS1PM Drive Options . . . 81
- Baldor Cooling Tower Control System . . . 83
- VS1CTD . . . 87

Analog AC Drives
- Selection Chart . . . 89
- Series 5 Micro Inverters . . . 90

High Horsepower AC H-Series Drives
- Selection Chart . . . 89
- HiHP Series 15H Inverter Drives . . . 95
- HiHP Series 15H Inverter Drives Packaged Drives . . . 97
- HiHP Series 18H Vector Drives . . . 98
- HiHP Series 18H Vector Drives Packaged Drives . . . 100
- HiHP Series 15H and Series 18H Vector Drives Packaged Drives Accessories and Options . . . 101
- Series 22H Line Regenerative Vector Drives . . . 102
- Series 15H, 18H and 22H Accessories and Options . . . 104

Common Options
- Three Phase Line and Load Reactors . . . 110
- Digital Speed Potentiometer . . . 112
- Digital Tachometer . . . 113
- Remote Operator Control Stations . . . 114

Baldor DC Drives
- DC Drives Selection Chart . . . 115
- Fractional Hp DC Control . . . 116
- NEMA1 Enclosed DC Control for PMDC and Shunt Wound Motors . . . 116
- Chassis Mount DC Control . . . 117
- Plug-In Horsepower Resistor and Fuse Kit . . . 118
- NEMA 4X DC Controls and Accessories . . . 119
- Line Regen DC Controls and Accessories . . . 120
- NEMA Enclosed DC Control Specifications . . . 120
- Chassis Mount DC Control Specifications . . . 121
- DC Control Dimension Diagrams . . . 122
- Series 19H Digital DC Control . . . 130
- Series 20H Line Regenerative Digital DC Control . . . 136

Application Information . . . 143

Legacy Drive Conversions (includes AC and DC Cross Reference Info) . . . 172

Glossary of Terms . . . 175

Index . . . 181

Baldor Drives Service Centers . . . 187

Baldor District Offices . . . Back Cover

General Purpose VS1 AC Drives Selection Chart

VS1 Microdrives			Pump/Fan Drives	High Performance Drives	
VS1ST	**VS1MX**	**VS1MD**	**VS1PF**	**VS1SP**	**VS1GV**
Main Attributes					
Starter-style Microdrive; V/Hz Control, Built-In PI Loop; DIN or Panel Mounting.	Microdrive; NEMA 4X & NEMA 12 Enclosures; V/Hz Control; Built-In Disconnect	Mircrodrive; V/Hz or Sensorless Vector Control; Built-In PID; Ready to Operate Out of the Box	Pump & Fan Drive; Energy Savings Features; V/Hz or Sensorless Vector; Text-Based Menus and Parameter Names	Enhanced Sensorless Vector or V/Hz Control; NEMA 1 Enclosure; Built-In Braking; Full-Graphic Display	Performance Vector, Sensorless Vector or V/Hz Control; NEMA 1 Enclosure; Built-In Braking; Full-Graphic Display; Encoder Feedback Standard
Hp Range					
230V Hp – 0.5 to 5	0.5 to 5	0.5 to 30	7.5 to 40 (50-75 PFS)	1 to 60	1 to 60
460V Hp – 1 to 15	1 to 10	0.5 to 30	7.5 to 700	1 to 450	1 to 450
600V Hp - 1 to 60 (STS)	1 to 7.5 (MXS)		7.5 to 150	1 to 300	1 to 300
Voltage Range					
115V/230V 1-Phase 230V/460V 3-Phase 600V 3-Phase	115V/230V 1-Phase 230V/460V 3-Phase 600V 3-Phase	230V 1-Phase 230V/460V 3-Phase	230V/460V/600V 3-Phase	115V/230V 1 phase 230V/460V/600V 3-Phase	115V/230V 1 Phase 230/460V/600V 3-Phase
Enclosure Selection					
IP20	NEMA 4X/12; NEMA 12; with or w/o Disconnect	IP20/NEMA 1 Kits Available	NEMA 1 (7.5 to 15Hp) IP00/NEMA 1 Kit Option (20 to 125Hp) IP00 (150 to 700Hp)	NEMA 1 (1 to 450Hp) NEMA 4X/12 (1 to 10Hp)	NEMA 1 (1 to 450Hp) NEMA 4X/12 (1 to 10Hp)
Control Mode					
V/Hz	V/Hz	Sensorless Vector or V/Hz	Sensorless Vector or V/Hz	Sensorless Vector or V/Hz	Closed Loop Vector, Sensorless Vector or V/Hz
Speed Range (Typ.)					
20:1	20:1	30:1	30:1	90:1	1000:1
Communications Options					
Built-In Modbus-RTU (RS-485) DIN Rail Gateways: DeviceNet, Profibus-DP	Built-In Modbus-RTU (RS-485)	Built-In Modbus-RTU (RS-485) DeviceNet Ethernet/IP Modbus/TCP	Built-In RS-485, Modbus-RTU, DeviceNet, Profibus-DP, Modbus/TCP, Lonworks, BACNET, Metasys-N2	Built-In USB and Modbus-RTU, Ethernet Server, DeviceNet, EtherNet/IP, Modbus/TCP, Profibus-DP, Metasys-N2, BACNET-MSTP, LonWorks	Built-In USB and Modbus-RTU, Ethernet Server, DeviceNet, EtherNet/IP, Modbus/TCP, Profibus-DP, Metasys-N2, BACNET-MSTP, LonWorks
Operator Interface					
Local or Remote Mounted LED Display and Keypad	Local or Remote Mounted LED Display and Keypad; Copycat Capability; Speed Pot; Fwd/Rev Switch; Input Disconnect	Local or Remote Mounted LED Display and Keypad; Copycat Capability	Local or Remote Mounted Text Based LCD Display and Keypad; Copycat Capability	Local or Remote (NEMA 4) Mounted Graphical LCD Display and Keypad; Copycat Capability	Local or Remote (NEMA 4) Mounted Graphical LCD Display and Keypad; Copycat Capability
Matched Performance® Motors					
XE, M & CP Standard-E, EM & ECP Super-E	E-Z KLEEN® Plus, Ultra KLEEN®, XE, WDM Standard-E, EWDM Super-E	XE, M & CP Standard-E®, EM & ECP Super-E®	XE, M & CP Standard-E, EM & ECP Super-E	XE, VS-Master, RPM-AC, M & CP Standard-E, EM & ECP Super-E, IDM & IDNM InverterDuty®, IDWNM InverterDuty	VS-Master, RPM-AC, ZDM VectorDuty®, ZDNM VectorDuty, ZDWNM VectorDuty
See page 14	See page 17	See page 9	See page 33	See page 53	See page 64

PRICES ARE SUBJECT TO CHANGE WITHOUT NOTICE

BALDOR

Special Purpose VS1 AC Drives Selection Chart

Permanent Magnet Drives	Cooling Tower Drives	H2 Servo Drives	HiHP 230V Pump/Fan Drives	600V Microdrives		1-Phase 230V OEM Drives
VS1PM	**VS1CTD**	**VS1SD**	**VS1PFS**	**VS1STS**	**VS1MXS**	**VS1SM**
Main Attributes						
High-performance drive for control of Permanent Magnet Motors; NEMA 1 Enclosure; Built-in Braking; Full-Graphic Display	High-performance drive for control of Cooling Tower PM Motors; NEMA 1 Enclosure; Built-in Braking; Full-Graphic Display	High-performance drive for control of 3-phase Surface Permanent Magnet Servo Motors; NEMA 1 Enclosure; Built-in Braking; Full-Graphic Display	230V Pump & Fan Drive for 50, 60 and 75 Hp Applications. Text-Based Menus and Parameter Names	Starter style 600V Microdrive; V/Hz and Sensorless Vector Control; Built-in PID Loop	NEMA 12 / 600V Microdrive; V/Hz and Sensorless Vector Control; Built-in PID Loop; Built-in Disconnect	Sub-micro Drive; Single-Phase Input / Three-Phase Output; V/Hz or Sensorless Vector Control; Built-in EMC Filter Available
Hp Range						
10 to 500	10 to 500	3 to 414 Amps	50, 60 and 75HP	1 to 60	1 to 7.5	0.5 to 3
Voltage Range						
460V - 3-Phase	460V - 3-Phase	230V / 460V - 3-Phase	230V - 3-Phase	600V - 3-Phase	600V - 3-Phase	230V - 1-Phase
Enclosure Selection						
NEMA 1	NEMA 1	NEMA 1 NEMA 4X/12	IP00	IP20	NEMA 12	IP20
Control Mode						
Closed-Loop Perm. Magnet Control	Open-Loop Perm. Magnet Control	Surface PM Control	V/Hz and Sensorless	V/Hz and Sensorless	V/Hz and Sensorless	V/Hz and Sensorless
Communications Options						
Built-in USB and MODBUS-RTU, Ethernet Server, DeviceNet, MODBUS-TCP, Profibus-DP, Metasys-N2, BACnet-MSTP, LonWorks	Built-in USB and MODBUS-RTU, Ethernet Server, DeviceNet, MODBUS-TCP, Profibus-DP, Metasys-N2, BACnet-MSTP, LonWorks	Built-in USB and MODBUS-RTU, Ethernet Server, DeviceNet, MODBUS-TCP, Profibus-DP, Metasys-N2, BACnet-MSTP, LonWorks	MODBUS-RTU, DeviceNet, Profibus-DP	Built-in MODBUS-RTU Gateways: DeviceNet Profibus-DP	Built-in MODBUS-RTU Gateways: DeviceNet Profibus-DP	Built-in MODBUS-RTU
Operator Interface						
Local or Remote (NEMA 4) Mounted Graphical LCD Display and Keypad; Copycat Capability; Ethernet/IP	Local or Remote (NEMA 4) Mounted Graphical LCD Display and Keypad; Copycat Capability; Ethernet/IP	Local or Remote (NEMA 4) Mounted Graphical LCD Display and Keypad; Copycat Capability; Ethernet/IP	Local or Remote Mounted Text Based LCD Display and Keypad; Copycat Capability	Local or Remote Mounted LED Display and Keypad; Copycat Capability	Local or Remote Mounted LED Display and Keypad; Copycat Capability; Speed Pot; Fwd/Rev Switch; Input Disconnect	Embedded LED Display and Keypad; Speed Pot
See page 76	See page 87	See page 74	See page 39	See page 26	See page 28	See page 31

PRICES ARE SUBJECT TO CHANGE WITHOUT NOTICE

VS1 Part Numbers

VS1 MD 4 50 - 4 Opts (T, B, D, F, L, P, R)

Enclosure:

- 0 = IP20
- 1 = NEMA 1
- 2 = NEMA 12
- 4 = NEMA 4X
- 9 = Chassis

Hp:

- 0P5 = 1/2 HP
- 1 = 1 HP
- etc.

Voltage:

- 1 = 115V Single-Phase
- 2 = 230V
- 3 = 380 - 400V
- 4 = 460V
- 5 = 575V
- 6 = 115V / 230V Single-Phase
- 8 = 230V Single-Phase

Family (All Series 1):

- ST = Starter Replacer Drive
- STS = 600V - IP20 Microdrive
- SM = Sub-Micro
- MD = Microdrive
- MX = NEMA 4X Microdrive
- MXS = 600V - NEMA 12 Microdrive
- PF = Pump & Fan Drive
- PFB = PF Bypass
- PFS = 230V - 50 - 75 Hp PF "Special"
- SP = Standard Purpose
- GV = General Vector
- SD = Servo Drive
- PM = Permanent Magnet
- CTD = Cooling Tower Drive

Option Codes

- T = Transistor (Braking)
- B = Braking (Both Trans. & Res.)
- D = Disconnect
- F = Filter (EMC)
- L = DC Link Inductor
- P = Fused Protection
- R = Output Reactor

BALDOR

Baldor Drives Center

Test Capabilities

Large HP Capability

Test facilities utilize Baldor regenerative control technology on dynamometers for maximum performance and energy efficiency. Capabilities exist for continuous loading from fractional to 800 Hp with the largest dyno being capable of intermittent loading over 1000 Hp. The dynamometers found throughout the test facilities are fully instrumented with equipment to read temperature, speed, torque and power (volts, amps, watts, PF, Hz, VA, VAR, harmonics, etc.) and are fully automated. Hipotronics variable AC sources are used in conjunction with our largest dynamometers to enable testing at high, low and nominal line voltages and all points in between. The Hipotronics units are capable of up to 2000 amps, 0-4160 volts and are equipped with Yokogawa Power Analyzers for power measurements. Independent control of each phase voltage allows for the introduction of a degree of phase imbalance to test "real world" conditions. The system's PC monitors the Hipotronics settings and test conditions and logs test data.

AST-35 HALT/HASS Chamber

The AST-35 chamber is designed specifically for very aggressive temperature change rates and high levels of multi-axis repetitive shock vibration. It can be used for a variety of testing such as HALT, HASS, Step Stress, etc. It is Liquid Nitrogen (LN2) cooled with a temperature range of -100°C to +200°C (-148°F to 392°F). It can provide up to 50grms of random vibration (2 Hz to 5 kHz). The vibration table can support a payload of 200 pounds. It has a 42"X42"X40" work area and product temperature change rates greater than 70°C per minute can be achieved. No matter what method of testing is chosen, the AST system provides extreme stresses to help quickly identify potential product weaknesses that in turn help produce a more reliable product.

Thermal Testing and Analysis

Several thermal/environmental chambers have testing capabilities from -100° to +200°C and humidity capabilities from 10% to 95% RH. The chambers can be programmed to cycle between multiple set points for varying times.

A Fluke Infrared Camera is used for thermal imaging. Infrared technology is utilized to analyze components such as IC chips and PCB's, heat sink thermal resistance, fan cooling effects, thermal dissipation characteristics of motors, bearing and brush temperatures and many other applications.

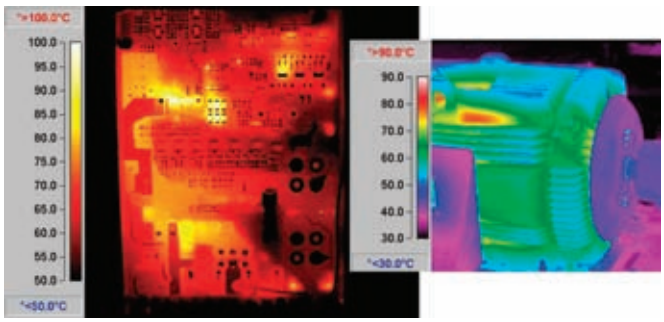

Baldor Drives Center

Test Capabilities

Commitment to Safety

Baldor is committed to accident and injury prevention! All test facility personnel are trained and certified in Basic First Aid and CPR. In addition, the lab and production areas have nationally certified First Responders with Pre Hospital Trauma Life Support (PHTLS) training.

Calibration

A Fluke 5520A calibrator along with other NIST traceable standards is used to calibrate the majority of the electronic instruments within Baldor's test facilities. In house calibration services are also performed on final test panels and electronic instrumentation for other Baldor plants and facilities.

Surface Mount Technology

Surface Mount (SMT) soldering and inspection equipment is used during prototyping of new designs and upgrades. PCB layout, design, evaluation and testing are also performed.

Every control is powered up and load tested before it leaves the plant using an automated system. This system first verifies that each control is programmed correctly using an interface between the test system and BUS. Next, using the VS1 USB interface and standard firmware, the control is commanded to spin a motor. Output speed is verified using external current transducers and the motor is loaded to 150% of rated current. The control cycles between 150% of rated current and 50% rated current for 2 minutes. Reversal tests are then run to test the braking transistor and resistor functionality. Finally the drive is power cycled, factory defaults are set, and any custom parameters are programmed into the drive. The results of the test, including the serial numbers of the boards in the control are saved in a database. A shipping label is printed and the control is boxed up ready for shipment. Each control takes about 10 minutes to test and up to 5 controls of varying voltages and sizes can be tested at the same time.

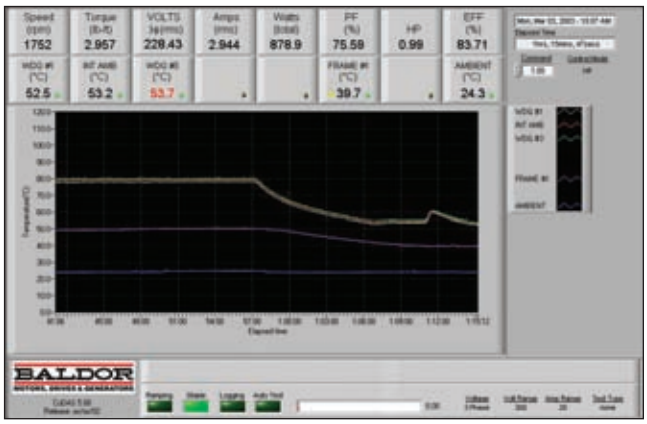

Dyno Technology

A Labview application developed by Baldor lab technicians control the dynes and monitors all test conditions. Each dyno utilizes Baldor regenerative drive technology for optimum performance and efficiency. Each is equipped with variable voltage sources and 50/60Hz power. Full instrumentation provides monitoring of temperature, speed, torque, and power (volts, amps, watts, PF, Hz, VA, VAR, harmonics, etc.). The data is transferred directly to computers that control and monitor the entire operation. The system completely automates standard test sequences such as brake tests, heat runs and speed versus torque curve tests. It also provides for custom load profiles such as inertia, pump jack and fan and pump load simulations. Each test station is networked for direct test data storage to the lab servers as well as allowing tests to be monitored remotely.

Porto-Sag PS200

The Porto-Sag PS200 is used to inject voltage sags of controlled magnitude and duration while monitoring the response of the process.

Voltage: 100-277VAC
Current: 200A, 700 A peak for ½ cycle
Sag/Swell duration: ¼ cycle to 10 seconds

Magnitude: 125% to 0% in 5% steps.
360° point on wave control in 1° increments

NSG 2050 Surge Mainframe

The NSG 2050 is a surge generator with pulse amplitudes up to 6.6kV single or 3-phase coupling network. It covers all the widely used burst test specs of IEC, EN, ANSI-IEEE as well as extended manufacturer's requirements.

BALDOR

Baldor Drives Center

Test Capabilities

UL, CSA, EMI and Immunity Testing

The test facilities perform required testing for UL approval of Baldor motor and control products and is a participant in the UL Client Test Data Program (CTDP) for UL 508C, UL 2111, UL 1995. Additionally, certifications are held for motor efficiency testing under both CSA and NVLAP. UL short circuit testing for drives products is performed in a specifically designed room. This short circuit room is designed to provide a minimum of 50,000 amps of short circuit current. Electrostatic Discharge (ESD), Electronic Fast Transient (EFT) and burst equipment is used to test EMI and immunity levels of drive products in accordance with CE standards.

Customer Application Testing

The lab routinely tests Baldor products on customer units in the lab.

Hardware/Software Test Systems Design

Lab technicians participate in hardware and software design of lab test equipment, production test equipment and trade show demo units.

Labview applications developed by lab technicians are used throughout the lab and in many locations throughout Baldor. One example is the automation of our dynamometers as described above. Another example is the system used to automate the verification process of new software releases for Baldor drive products. The Labview application interfaces with the control just as a customer would and exercises and monitors all input and output signals of the drive for proper operation and compliance to specified limits. In addition, the system simulates operator keystrokes to the control and monitors motor performance to verify proper operation of the drive under test. Test conditions and results are collected by a PC and stored directly to the lab's network server. This testing runs 24 hours a day, seven days a week for several weeks at a time in order to verify new software versions prior to release. Other applications developed within the lab simulate inertia, fan and pump and pump jack loads, monitor and control long term life testing, speed versus torque curve collection and tensile testing.

Every control is powered up and load tested before it leaves the plant using an automated system. This system first verifies that each control is programmed correctly using an interface between the test system and BUS. Next, using the VS1 USB interface and standard firmware, the control is commanded to spin a motor. Output speed is verified using external current transducers and the motor is loaded to 150% of rated current. The control cycles between 150% of rated current and 50% rated current for two minutes. Reversal tests are then run to test the braking transistor and resistor functionality. Finally the drive is power cycled, factory defaults are set, and any custom parameters are programmed into the drive. The results of the test, including the serial numbers of the boards in the control are saved in a database. A shipping label is printed and the control is boxed up ready for shipment. Each control takes about ten minutes to test and up to five controls of varying voltages and sizes can be tested at the same time.

Alternator Testing

Alternator testing is performed utilizing a 175KVA test bed. The 175kVA test bed is used in developing new alternator concepts and designs. The alternators are driven by a Baldor vector motor and vector control. This technology allows for accurate speed regulation, which in turn provides a constant output frequency from the alternator under its entire load range. The alternators are loaded using two Avtron load banks. One load bank is a 480V, 500kW resistive load bank and the other is a 480V, 375kVA reactive load bank. A single test panel controls both load banks and monitors load and all other conditions during testing.

Lubricating Greases Testing

Two test fixtures are used to determine the performance of lubricating greases in ball bearings under loads at high speed and elevated temperatures. The fixtures are capable of speeds up to 10,000 RPM with 50 pounds of radial loading. Both fixtures have a temperature range from 90°F to 500°F and the failure modes are monitored.

Sound and Vibration

Sound testing is done in a semi-anechoic sound room. An HP 3569A Acoustic Intensity Analyzer and a precision sound level meter are used in accordance with IEEE Standard 85 to run the sound tests. The isolated seismic pad located in the sound room is used in with a SPS390 and OROS OR36 Dynamic Signal Analyzers for no load vibration testing in accordance with NEMA standards.

Baldor Drives Center

Test Capabilities

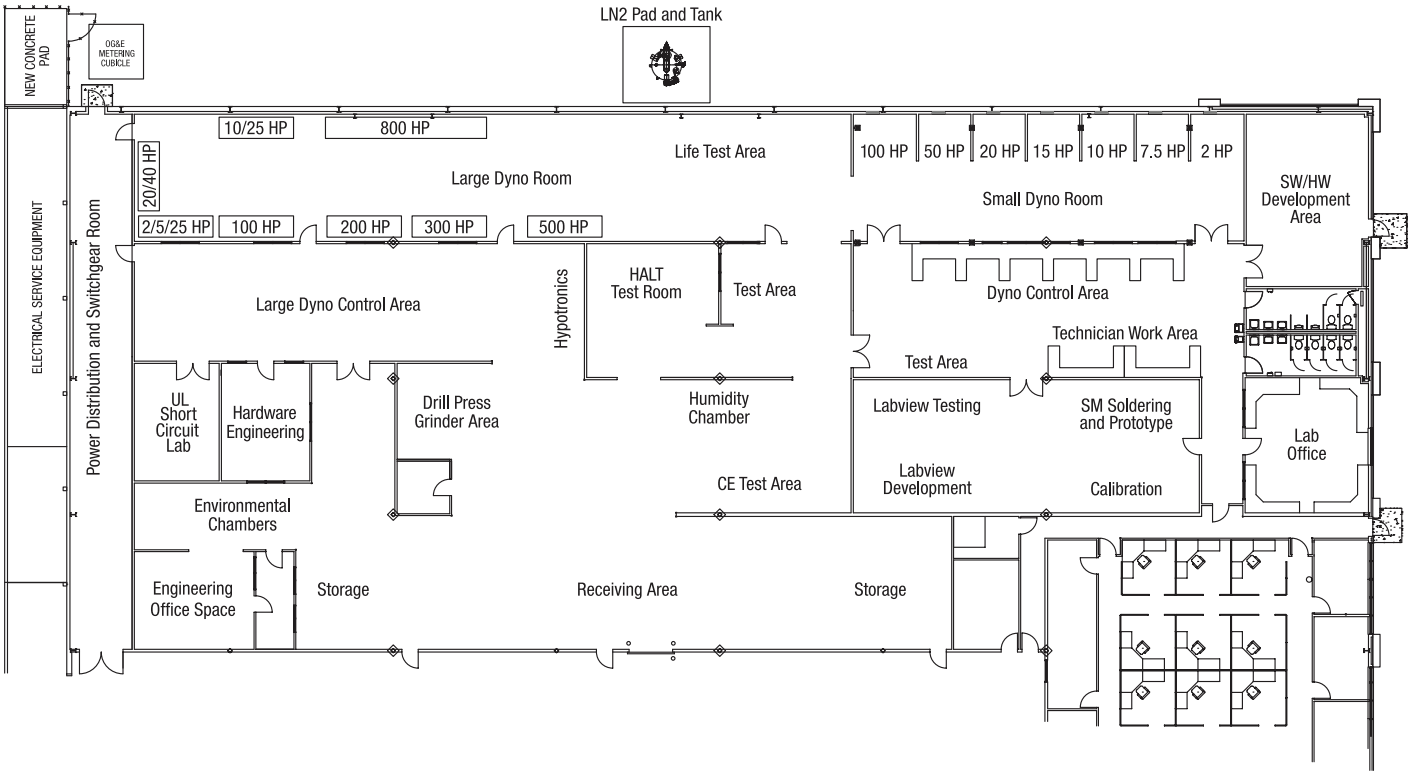

Fort Smith Test Facilities Features

- Over 32,000 square feet of lab space
- Covered floor trenches provide easy wiring to all areas
- Noise level monitoring equipment notifies technicians when hearing protection is required
- Dynamometers utilize Baldor Vector Motors and Regen Drives
- Hoists in large dynamometer areas for safe and easy product handling
- Bus rail power distribution allows for easy power distribution and expansion
- Short circuit room with 50,000 amps capability for UL testing
- Locked rotor test room for long term locked rotor testing
- Isolation transformers for equipment protection
- Generators provide 50Hz to dynamometer stations
- Isolated seismic pad for vibration testing
- Semi-anechoic sound room
- Network drops throughout labs
- First Responder kits complete with AED

Fort Smith Test Facilities Accreditations

- UL Certificate of Qualification for Client Test Data Program for UL 508C
- UL Certificate of Qualification for Client Test Data Program for UL 2111
- UL1995 Heat Run
- CSA C390 – Certification # EEV-78389
- NVLAP Accreditation for [24/M01] IEEE112, Method B LAB CODE 200537-0

Fort Smith Test Facilities Major Equipment List

- Power Analyzers
- Digital Oscilloscopes
- Logic Analyzers
- Inductance Meters
- Distributed Capacitance Meters
- Infrared Camera
- Multimeters and Precision Ohm Meters
- Power Supplies and Hipot Testers
- Fluke Calibrator and other NIST standards
- Data Acquisition Hardware

BALDOR

Baldor Drives Center

Test Capabilities

Fort Smith Test Facilities Major Equipment List (cont)

- Burst, EFT and ESD generators
- NSG2025 Surge generator
- Porto-Sag PS-200 Sag/Swell generator
- Chart Recorders
- Two Thermal Chambers (-68°C to 170°C)
- One Thermal Chamber (-30°C to 177°C)
- One Thermal and Humidity Chamber (-68°C to 177°C and 10% to 95% RH)
- One HALT/HASS Chamber (-100°C to 200°C and 0-50grms random vibration)
- Variable AC supplies up to 2000A
- Automated Dynamometers from Fractional to 800HP Continuous (1000HP Intermittent)
- SMT Solder Stations
- Short Circuit Room (50,000 amp short circuit capability)
- Generators for 50Hz Testing
- Test Hoist for Elevator and Hoist Software Development
- Alternator Test Bed up to 175 kVA
- Resistive Load Bank to 500 kW
- Inductive Load Bank to 375 kVA
- Locked Rotor Long Term Life Test Room
- Precision Sound Level Meter
- HP 3569A Acoustic Intensity Analyzer
- OROS OR36 Vibration Analyzer
- SPS390 Dynamic Signal Analyzer
- Semi-Anechoic Room with Seismic Pad
- Bearing Life Test Fixtures
- Video and Digital Photography for Test Documentation

Fort Smith Test Facilities Scope of Tasks

- Prototyping
- Design verification tests
- Software verification
- Reliability testing
- Endurance/Life testing
- HALT/HASS testing
- Burst/Surge/Sag/Swell Testing
- UL testing (508C, 2111, 1995)
- Instrument calibration
- Test panel design
- Software development
- PCB design and analysis
- Matched Performance
- Application testing
- Motor Plug Reversal
- Training
- Customer site testing
- Thermal development
- Power quality (harmonic) analysis
- EMI and Immunity testing
- Environmental testing
- Audible noise testing
- Customer witness testing
- Customer requested calibration tests
- Test software design and implementation
- CSA C390
- IEEE 112
- Efficiency testing
- AC and DC Brake Test
- AC and DC no load saturation test
- AC and DC motor heat rise testing
- Working rise at saturation
- Thermal capacity characteristics
- UL and CSA thermal development
- Friction and windage
- Servo viscous damping
- DC motor demagnetization test
- Torque measurement
- Precision resistance measurement
- Sleeve bearing testing
- Sound power level - ANSI S12.12
- Vibration level testing in accordance with NEMA MG1 Part 7
- Air flow measurement
- Thermocouple installation
- Rotor data collection
- Brush life testing
- Servo package tests
- Industrial BLDC tests
- Bearing evaluation and life testing

VS1MD
AC Micro Drive

1/2 thru 30 Hp	**230 VAC**	**3 Phase - 50/60 Hz**
1/2 thru 30 Hp	**460 VAC**	**3 Phase - 50/60 Hz**

Applications: Variable torque, constant torque or constant horsepower applications. New installations, replacements and original equipment manufactures (OEM).

Features: Volts per Hertz or Sensorless Vector Control with peak overload capacity of 200% and PID capability. Flexible mounting options with IP20 enclosure as standard and NEMA 1 kit option. Integral keypad, operator interface and local speed control. Programming by Groups makes it easy to navigate and find parameters. Basic Program Group contains the most common application related parameters. Power ratings up to 30 Hp in both 230V and 460V versions. Built-in braking transistor allows connection to remote braking resistor for enhanced performance needs.

Performance Features	Control Modes	V/Hz or Sensorless Vector
	Operator Interface Module	Integral Drive Mounted
	Display Lines	4-Character LED Display
	Programmable Preset Speeds	Eight
	Analog Outputs	One (0-10 VDC)
	Auto Restart	Yes -- Up to 10 attempts
	Frequency Avoidance	Three Bands
	Fault History	Last Five Faults
	Digital Inputs	Eight Completely Configurable Inputs
	Digital Inputs Type	Pull-up or Pull-down
Drive Specifications	Analog Inputs: Two Total	One: 0-10VDC or -10 to 10VDC, One: 4-20mADC
	Digital Outputs: Two Total	One Opto-coupled (Configurable), Form C Relay
	Meter Outputs	0-10 VDC: One Analog Usable for Meter (Proportional to Frequency, Output Current, AC Output Voltage, or DC Output Voltage)
	Maximum Load	30 Hp @ 460 VAC
	Overload Capacity	Drive Output 150% for One Minute, 200% for Twelve Seconds
	Frequency Accuracy	Digital Command: 0.01% of Max. Output Frequency, Analog Command: 0.1% of Max. Output Frequency
	Input Voltage Ranges	230 VAC (170-253); 460 VAC (323-528)
	Rated Input Frequency	50-60Hz (±5%)
	Carrier Frequency	1-15 kHz (3 kHz default)
	Operating Temperature	–10° to 50°C (IP20)
	Snubber (Dynamic Braking)	Built-in Transistor
	Dynamic Braking External	Up to 150% Dynamic Braking with appropriately sized resistor
	DC Injection Braking	Included
	Volts/Hz	Linear V/Hz, Quadratic V/Hz, Custom 4-Point V/Hz Curve
	Sensorless Vector	Full Sensorless Vector Control with Autotune Function and motor model
	Frequency Control Range	0-400 Hz
	Accel/Decel	Eight independently adjustable sets of ramps
	Time Range	0.1 to 600 Seconds
	S Curve Accel. & Decel.	Yes, with adjustable rounding percentage
	Keypad Speed Control	Yes
	Sink/Source Inputs	Selectable, 24 VDC Logic
	Electronic Overload Trip	Electronic Motor Overload Inverse Time calculation with Programmable Warning Level
	Communications	Built-in MODBUS-RTU (RS-485) Communications - optional DeviceNet
	PID Control	Built-in
Protective Features	Under Voltage	Level Depends on Voltage Class (240, 480)
	Ground Fault Protection	Ground Fault protection active during run
	Output Short Circuit	Phase-to-Phase on Drive Output
	Over Temperature	Heatsink Monitor
	DC Bus Overvoltage	DC Bus Level Trip
	Drive Overload	Exceed Drive rating of 150% for One Minute
	Over Current	Over-current/short-Circuit protection
	Output Phase	Trips on open Output Phase
	Loss of Reference	Trips on Loss of Speed Command Signal
	Cooling Fan	Detects an inverter fan failure (replace fan)
	Comm. Error	Detects a communication error (fault)
Agency Certifications		UL, cUL, CE
Service Conditions	Altitude	1,000 m (3,300 ft.), derate by 1% per 100 m up to 2,000 m maximum.
	Ambient Temperature	IP20: -10°C (14°F) to 50°C (122°F)
	Storage Temperature	-20°C (-2°F) to 65°C (149°F)
	Relative Humidity	10% to 95%, non-condensing

BALDOR

VS1MD – 230V, 50/60 Hz, 3-Phase

	Catalog Number	Frame	3-Phase Hp	1-Phase Hp	Output Current	List Price	Mult. Sym.
◊	VS1MD20P5	A	0.5	0.25	2.5A	447	EA
◊	VS1MD21	A	1	0.5	5.0A	464	EA
◊	VS1MD22	B	2	1	8.0A	581	EA
◊	VS1MD23	C	3	2	12.0A	670	EA
◊	VS1MD25	C	5	3	16.0A	860	EA
◊	VS1MD27	D	7.5	—	24.0A	1,255	EA
◊	VS1MD210	D	10	5	32.0A	1,489	EA
◊	VS1MD215	E	15	—	46.0A	1,861	EA
◊	VS1MD220	E	20	—	60.0A	2,327	EA
◊	VS1MD225	F	25	—	74.0A	2,908	EA
◊	VS1MD230	F	30	—	88.0A	3,635	EA

VS1MD – 460V, 50/60 Hz, 3-Phase

	Catalog Number	Frame	Hp	Output Current	List Price	Mult. Sym.
◊	VS1MD40P5	A	0.5	1.25A	534	EA
◊	VS1MD41	A	1	2.5A	559	EA
◊	VS1MD42	B	2	4.0A	676	EA
◊	VS1MD43	C	3	6.0A	782	EA
◊	VS1MD45	C	5	8A	972	EA
◊	VS1MD47	D	7.5	12.0A	1,257	EA
◊	VS1MD410	D	10	16.0A	1,502	EA
◊	VS1MD415	E	15	24.0A	1,878	EA
◊	VS1MD420	E	20	30.0A	2,347	EA
◊	VS1MD425	F	25	39.0A	2,934	EA
◊	VS1MD430	F	30	45.0A	3,667	EA

VS1MD – 230V, 50/60 Hz, 3-Phase Communication Ready Base Unit

(Note: Does not include local keypad)

	Catalog Number	Frame	Hp	Output Current	List Price	Mult. Sym.
◊	VS1MD20P5-8	A	0.5	2.5A	402	EA
◊	VS1MD21-8	A	1	5.0A	418	EA
◊	VS1MD22-8	B	2	8.0A	523	EA
◊	VS1MD23-8	C	3	12.0A	603	EA
◊	VS1MD25-8	C	5	16.0A	774	EA
◊	VS1MD27-8	D	7.5	24.0A	1,130	EA
◊	VS1MD210-8	D	10	32.0A	1,340	EA
◊	VS1MD215-8	E	15	46.0A	1,791	EA
◊	VS1MD220-8	E	20	60.0A	2,257	EA
◊	VS1MD225-8	F	25	74.0A	2,838	EA
◊	VS1MD230-8	F	30	88.0A	3,585	EA

VS1MD – 460V, 50/60 Hz, 3-Phase Communication Ready Base Unit

(Note: Does not include local keypad)

	Catalog Number	Frame	Hp	Output Current	List Price	Mult. Sym.
◊	VS1MD40P5-8	A	0.5	1.25A	480	EA
◊	VS1MD41-8	A	1	2.5A	503	EA
◊	VS1MD42-8	B	2	4.0A	608	EA
◊	VS1MD43-8	C	3	6.0A	704	EA
◊	VS1MD45-8	C	5	8A	875	EA
◊	VS1MD47-8	D	7.5	12.0A	1,131	EA
◊	VS1MD410-8	D	10	16.0A	1,352	EA
◊	VS1MD415-8	E	15	24.0A	1,808	EA
◊	VS1MD420-8	E	20	30.0A	2,277	EA
◊	VS1MD425-8	F	25	39.0A	2,854	EA
◊	VS1MD430-8	F	30	45.0A	3,597	EA

◊ Stock Model Numbers

VS1MD – Accessories

NEMA 1/IP30 Kit

The VS1MD AC drive has an enclosure rating of IP20, but includes provisions to mount a NEMA 1 kit. This kit provides a metal conduit plate for attaching user conduit, as well as a plastic top cover for the drive.

VS1MD NEMA 1 Kits

	Catalog Number	Description	List Price	Mult. Sym.
◊	**VS1MD-NM1A**	VS1MD NEMA 1 Kit, Frame A	39	EA
◊	**VS1MD-NM1B**	VS1MD NEMA 1 Kit, Frame B	39	EA
◊	**VS1MD-NM1C**	VS1MD NEMA 1 Kit, Frame C	46	EA
◊	**VS1MD-NM1D**	VS1MD NEMA 1 Kit, Frame D	56	EA
◊	**VS1MD-NM1E**	VS1MD NEMA 1 Kit, Frame E	62	EA
◊	**VS1MD-NM1F**	VS1MD NEMA 1 Kit, Frame F	84	EA

◊ Stock Model Numbers

VS1MD A-Frame

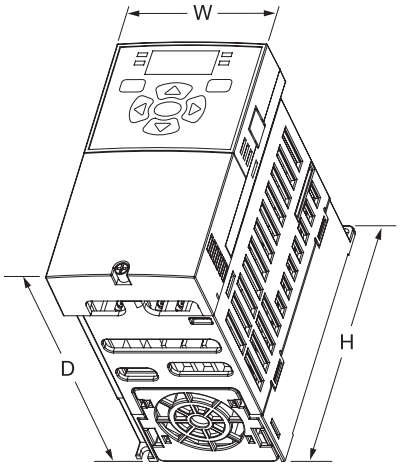

VS1MD B-Frame

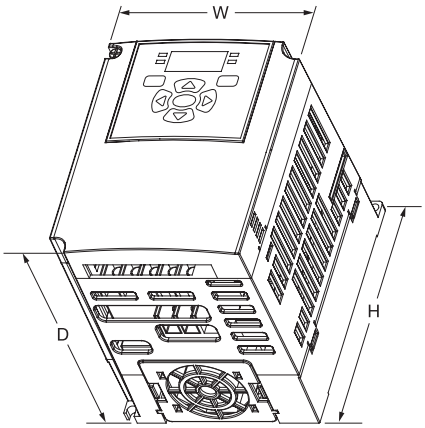

VS1MD C-Frame

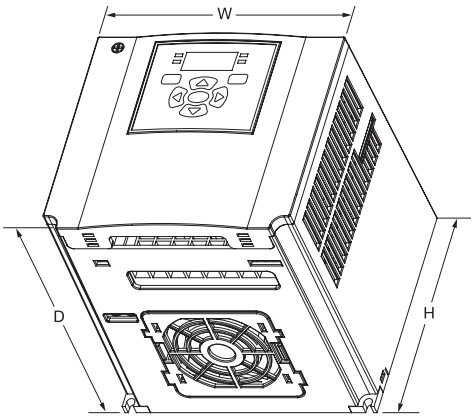

VS1MD Din Rail Mounting Kit

This adapter can be used to convert the panel mount A, B or C Frame VS1MD to DIN Rail mounting. The kit is a low profile mount to the back of the drive and adds a minimal depth to the drive.

	Catalog Number	Description	List Price	Mult. Sym.
◊	**VS1MD-DINA**	VS1MD Din Rail Kit A-Frame	18	EA
◊	**VS1MD-DINB**	VS1MD Din Rail Kit B-Frame	24	EA
◊	**VS1MD-DINC**	VS1MD Din Rail Kit C-Frame	32	EA

◊ Stock Model Numbers

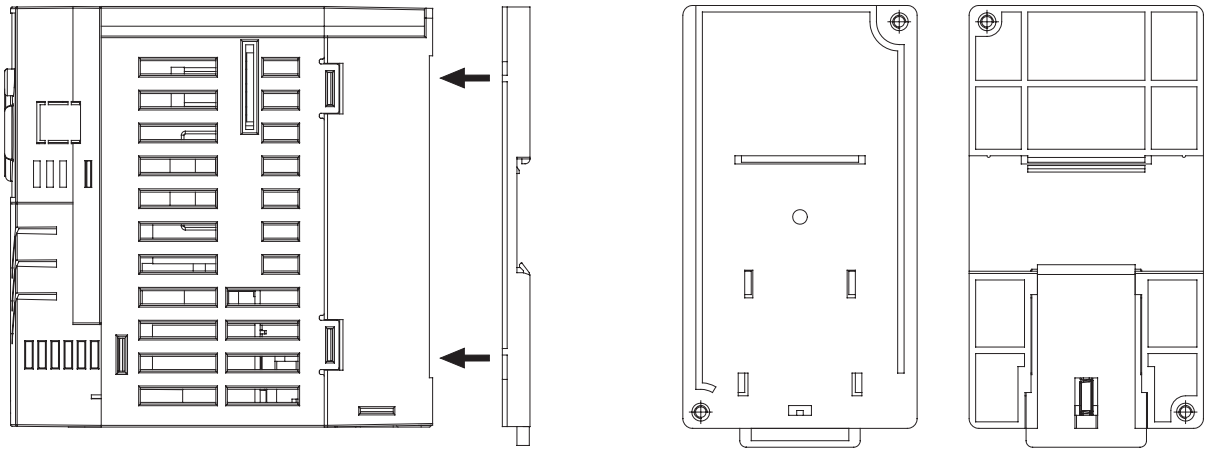

BALDOR

VS1MD – Accessories

VS1MD Keypads

The VS1MD keypad is available as a hand held (copycat) keypad or a remote mounted NEMA 1 keypad. The remote keypad can be panel mounted for remote control or programming up to 15 feet from the drive.

	Catalog Number	Description	List Price	Mult. Sym.
◊	**VS1MD-RKEY2**	VS1MD Remote Keypad with 6 ft. (2m) cable	95	EA
◊	**VS1MD-RKEY3**	VS1MD Remote Keypad with 9 ft. (3m) cable	104	EA
◊	**VS1MD-RKEY5**	VS1MD Remote Keypad with 15 ft. (5m) cable	123	EA

◊ Stock Model Numbers

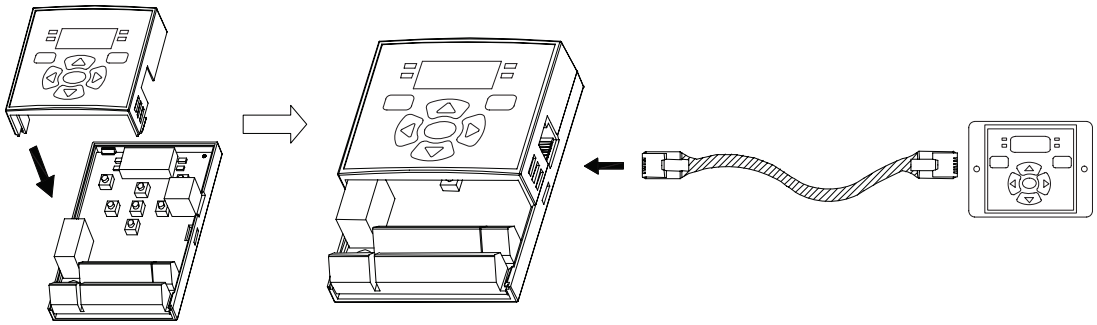

VS1MD CopyCat Loader

This device allows uploading of drive parameters. It is based on the remote keypad; however instead of a flange mounting, it is housed in a hand held plastic case. Simply plug into the drive with the supplied cable and access the upload setting. Parameters are stored in memory and can be downloaded later or used to duplicate drive setup across a number of units.

	Catalog Number	Description	List Price	Mult. Sym.
◊	**VS1MD-CCL**	VS1MD CopyCat Keypad	98	EA

◊ Stock Model Numbers

VS1MD Communication Option Kits

Ideal for factory, building and process automation industries, a communication card is available for DeviceNet. Future releases will include Profibus and dual protocol EtherNet IP / Modbus TCP/IP card.

Network cards fit internal to the VS1MD drive replacing the standard operator interface and I/O board. In order to use a communication option, order a VS1MD Communication Ready Drive from the preceding pages. The Communication Ready Drives can be identified by the "-8" suffix on the part number. Then, select a VS1MD Communication Option from the list below. It is also possible to convert a standard VS1MD Drive to work with these communication options. In order to use a standard VS1MD Drive with a Communication Option, you must also order these parts: MD64616285102 (front cover), MD64266285019 (base plate), MD10110002755 (header adapter).

	Catalog Number	Description	List Price	Mult. Sym.
◊	**VS1MD-DNET**	DeviceNet Communication Card	210	EA
◊	**VS1MD-PBUS**	Profibus Communication Card	$275	EA
◊	**VS1MD-ENET**	Ethernet IP Communication Card	Contact Baldor	EA

Overall dimensions of the drive are not affected by adding a network card.

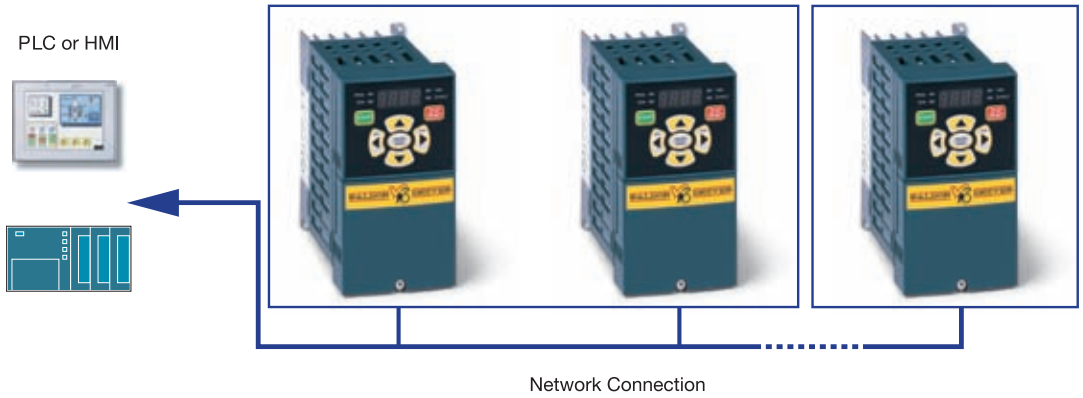

Dynamic Braking Resistor Kits

VS1MD drives include built-in braking transistors to aid in applications requiring the ability to stop rapidly. External braking resistors are required to implement the dynamic braking function. The below resistor selection provides resistors that are designed for 15% to 20% duty cycle braking applications. These resistors must be separately mounted.

VS1MD Dynamic Braking Resistors

Input Volts	Hp	Braking Transistor Specifications		100% Torque Braking Resistors					150% Torque Braking Resistors				
		Minimum Allowable Ohms	Maximum Continuous Braking Wattage	Ohms	Wattage	Catalog Number	List Price	Mult. Sym.	Ohms	Wattage	Catalog Number	List Price	Mult. Sym.
230	0.5	50	116	200	200	**VS1-R200W200**	58	EA	200	200	**VS1-R200W200**	58	EA
	1	44	174	160	200	**VS1-R160W200**	58	EA	100	200	**VS1-R100W200**	43	EA
	2	40	278	50	400	**VS1-R50W400**	128	EA	50	400	**VS1-R50W400**	128	EA
	3	26	464	50	400	**VS1-R50W400**	128	EA	33	600	**VS1-R33W600**	271	EA
	5	16	767	33	600	**VS1-R33W600**	271	EA	20	800	**VS1-R20W800**	298	EB
	7.5	8	929	20	800	**VS1-R20W800**	298	EB	15	1200	**VS1-R15W1200**	360	EB
	10	8	1394	15	1200	**VS1-R15W1200**	360	EB	10	2400	**VS1-R10W2400**	476	EB
460	0.5	133	116	200	200	**VS1-R200W200**	58	EA	200	200	**VS1-R200W200**	58	EA
	1	66	174	200	200	**VS1-R200W200**	58	EA	200	200	**VS1-R200W200**	58	EA
	2	66	348	200	400	**VS1-R200W400**	128	EA	200	400	**VS1-R200W400**	128	EA
	3	80	464	200	400	**VS1-R200W400**	128	EA	130	600	**VS1-R130W600**	271	EA
	5	64	755	100	400	**VS1-R100W400**	128	EA	85	1000	**VS1-R85W1000**	337	EB
	7.5	32	1235	85	1000	**VS1-R85W1000**	337	EB	40	2000	**VS1-R40W2000**	453	EA
	10	32	1394	60	1200	**VS1-R60W1200**	360	EB	40	2000	**VS1-R40W2000**	453	EA

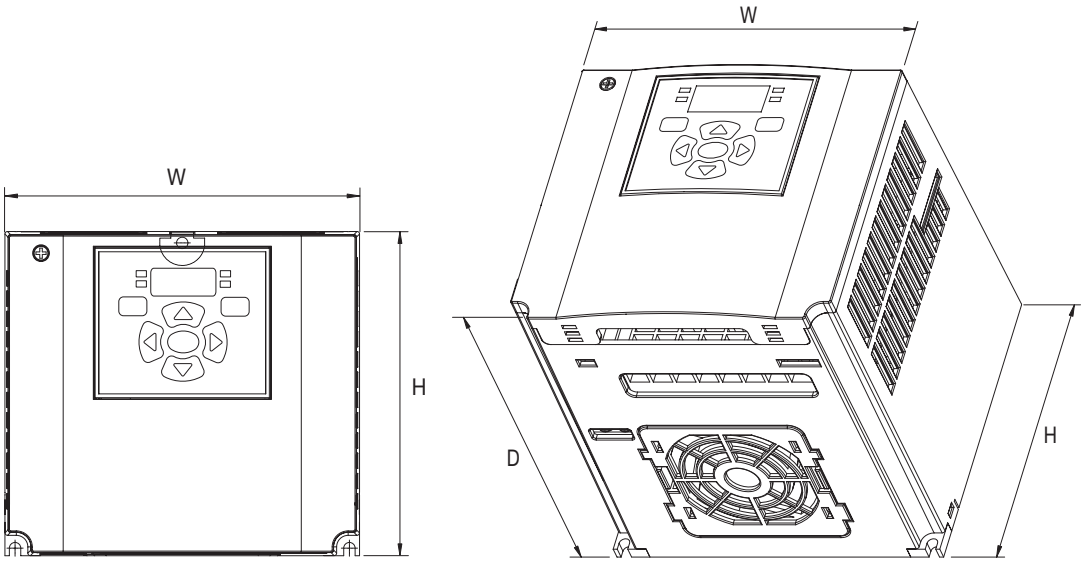

Mounting Dimensions

Frame	Height Inches (mm)	Width Inches (mm)	Depth Inches (mm)
A	5.04 (128)	2.75 (70)	5.12 (130)
B	5.04 (128)	3.94 (100)	5.12 (130)
C	5.04 (128)	5.20 (140)	6.10 (155)
D	8.66 (220)	7.08 (180)	6.69 (170)
E	15.40 (320)	11.30 (235)	9.12 (189.50)
F	19.73 (410)	12.50 (260)	10 (208.50)

BALDOR

VS1ST
AC Micro Drive

1/2 thru 1.5 Hp	**115 VAC**	**1 Phase - 50/60 Hz**
1/2 thru 3 Hp	**230 VAC**	**1 Phase - 50/60 Hz**
1/2 thru 5 Hp	**230 VAC**	**3 Phase - 50/60 Hz**
1 thru 15 Hp	**460 VAC**	**3 Phase - 50/60 Hz**

Applications: Variable torque, constant torque or constant horsepower applications. New installations, replacements and original equipment manufactures (OEM).

Features: Volts per Hertz Control with peak overload capacity of 175% and PID capability. **Flexible mounting options with IP20 enclosure as standard and DIN Rail mounting.** Integral keypad, operator interface and local speed control. Basic set of programming parameters. Power ratings up to 5 Hp at 230V and 15 Hp at 460V versions.

Performance Features	Control Modes	V/Hz
	Operator Interface Module	Integral Drive Mounted
	Display Lines	6-Character LED Display
	Programmable Preset Speeds	Four
	Analog Outputs	One (0-10 VDC)
	Auto Restart	Yes – Up to 5 attempts
	Frequency Avoidance	One Band
	Fault History	Last Four Faults
	Digital Inputs: Four	Two Programmable Digital Inputs, Two user selectable analog/digital inputs
	Digital Inputs Type	Pull-Up
Drive Specifications	Analog Inputs: Two	0-10VDC, 0 to 20mA or 4 to 20mA
	Relay Outputs: One	Built-in Form C Relay
	Analog Output/Digital Output	0-10 VDC: One Analog Usable for Meter (Freq., Current, Voltage) or Digital Output
	Maximum Load	15 Hp @ 460 VAC
	Overload Capacity	Drive Output 150% for one minute and 175% for 2 seconds
	Input Voltage Ranges	115 VAC (99-126); 230 VAC (198-264); 460 VAC (342-528)
	Rated Input Frequency	50-60Hz (±5%)
	Carrier Frequency	4-32 kHz (8 kHz default)
	Operating Temperature	0° to 50°C
	Snubber (Dynamic Braking)	Built-in Transistor (Frames B & C)
	Dynamic Braking External	Up to 150% Dynamic Braking with appropriately sized resistor
	DC Injection Braking	Included
	Volts/Hz	Linear V/Hz, Energy Optimizer Function
	Frequency Control Range	0 - 500Hz
	Accel/Decel:	Independently adjustable accel. & decel. ramps
	Time Range:	0 to 600 Seconds
	Keypad Speed Control	Yes
	Sink/Source Inputs	Selectable, 24 VDC Logic
	Electronic Overload Trip	Electronic Motor Overload Inverse 150% for 1 minute or 175% for 2 seconds
	Communications	Built-in MODBUS-RTU (RS-485) Communications
	PI Control	Built-in
Protective Features	Under Voltage	Level Depends on Voltage Class (240, 480, or 575)
	Output Short Circuit	Phase-to-Phase on Drive Output
	Over Temperature	Heatsink Monitor
	DC Bus Overvoltage	DC Bus Level Trip
	Drive Overload	Exceed Drive rating of 150% for One Minute or 175% for 2 seconds
	Over Current	Over-current/short-Circuit protection
	Output Phase	Trips on open Output Phase
	Loss of Reference	Trips on Loss of Speed Command Signal
	Comm. Error	Detects a communication error (fault)
Agency Certifications		UL, cUL, CE, C-tick
Service Conditions	Altitude	1,000 m (3,300 ft.), derate by 1% per 100m up to 2,000 on maximum.
	Ambient Temperature	IP20: -10°C (14°F) to 50°C (122°F)
	Storage Temperature	-40°C (-40°F) to 60°C (140°F)
	Relative Humidity	10% to 95%, non-condensing

VS1ST – 115V, 50/60 Hz, 1-Phase Input (230V, 3-Phase Output)

	Catalog Number	EMC Filter	Transistor	Frame	Hp	Output Current	List Price	Mult. Sym.
◊	VS1ST10P5-0	No	No	A	0.5	2.3	415	EA
◊	VS1ST11-0	No	No	A	1	4.3	485	EA
◊	VS1ST11P5-0T	No	Yes	B	1.5	5.8	596	EA

VS1ST – 230V, 50/60 Hz, 1-Phase Input (230V, 3-Phase Output)

	Catalog Number	EMC Filter	Transistor	Frame	Hp	Output Current	List Price	Mult. Sym.
◊	VS1ST80P5-0	No	No	A	0.5	2.3	334	EA
	VS1ST80P5-0F	Yes	No	A	0.5	2.3	351	EA
◊	VS1ST81-0	No	No	A	1	4.3	362	EA
	VS1ST81-0F	Yes	No	A	1	4.3	447	EA
◊	VS1ST82-0	No	No	A	2	7	436	EA
	VS1ST82-0F	Yes	No	A	2	7	574	EA
◊	VS1ST82-0T	No	Yes	B	2	7	543	EA
	VS1ST82-0TF	Yes	Yes	B	2	7	649	EA
◊	VS1ST83-0T	No	Yes	B	3	10.5	606	EA
	VS1ST83-0TF	Yes	Yes	B	3	10.5	762	EA

VS1ST – 230V, 50/60 Hz, 3-Phase Input (230V, 3-Phase Output)

	Catalog Number	EMC Filter	Transistor	Frame	Hp	Output Current	List Price	Mult. Sym.
◊	VS1ST20P5-0	No	No	A	0.5	2.3	334	EA
◊	VS1ST21-0	No	No	A	1	4.3	362	EA
◊	VS1ST22-0	No	No	A	2	7	436	EA
◊	VS1ST22-0T	No	Yes	B	2	7	510	EA
	VS1ST22-0TF	Yes	Yes	B	2	7	543	EA
◊	VS1ST23-0T	No	Yes	B	3	10.5	521	EA
	VS1ST23-0TF	Yes	Yes	B	3	10.5	606	EA
◊	VS1ST25-0T	No	Yes	C	5	14	691	EA
	VS1ST25-0TF	Yes	Yes	C	5	14	862	EA

VS1ST – 460V, 50/60 Hz, 3-Phase Input (460V, 3-Phase Output)

	Catalog Number	EMC Filter	Transistor	Frame	Hp	Output Current	List Price	Mult. Sym.
◊	VS1ST41-0	No	No	A	1	2.2	436	EA
	VS1ST41-0F	Yes	No	A	1	2.2	489	EA
◊	VS1ST42-0	No	No	A	2	4.1	511	EA
	VS1ST42-0F	Yes	No	A	2	4.1	564	EA
◊	VS1ST42-0T	No	Yes	B	2	4.1	585	EA
	VS1ST42-0TF	Yes	Yes	B	2	4.1	628	EA
◊	VS1ST43-0T	No	Yes	B	3	5.8	628	EA
	VS1ST43-0TF	Yes	Yes	B	3	5.8	681	EA
◊	VS1ST45-0T	No	Yes	B	5	9.5	734	EA
	VS1ST45-0TF	Yes	Yes	B	5	9.5	787	EA
◊	VS1ST47-0T	No	Yes	C	7.5	14	1,043	EA
	VS1ST47-0TF	Yes	Yes	C	7.5	14	1,096	EA
◊	VS1ST410-0T	No	Yes	C	10	18	1,160	EA
	VS1ST410-0TF	Yes	Yes	C	10	18	1,245	EA
◊	VS1ST415-0T	No	Yes	C	15	24	1,565	EA
	VS1ST415-0TF	Yes	Yes	C	15	24	1,680	EA

◊ Stock Model Numbers

VS1ST AC Micro Drive

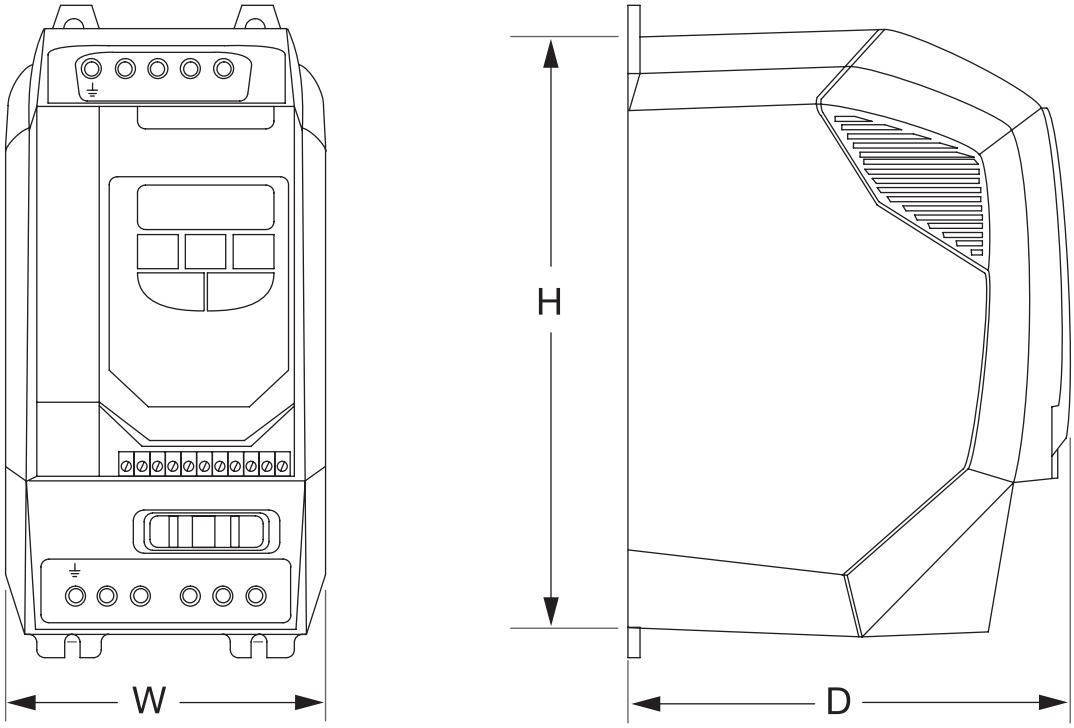

Mounting Dimensions

Frame	Height Inches (mm)	Width Inches (mm)	Depth Inches (mm)
A	6.81 (173)	3.23 (82)	4.84 (123)
B	8.70 (221)	4.29 (109)	5.91 (150)
C	10.28 (261)	5.16 (131)	6.89 (175)

VS1MX
AC Micro Drive

1/2 thru 1.5 Hp	**115 VAC**	**1 Phase - 50/60 Hz**
1/2 thru 3 Hp	**230 VAC**	**1 Phase - 50/60 Hz**
2 thru 5 Hp	**230 VAC**	**3 Phase - 50/60 Hz**
1 thru 10 Hp	**460 VAC**	**3 Phase - 50/60 Hz**

Applications: Applications that require a washdown or harsh duty enclosure. Ideal for environments where dust, oil mist or water is prevalent. Variable torque, constant torque or constant horsepower applications. Target stand alone applications where a local disconnect is required. New installations, replacements and original equipment manufactures (OEM).

Features: Volts per Hertz Control with peak overload capacity of 175%. Flexible mounting options NEMA 12, NEMA 4X, Input Disconnect models and EMC Filter models. Integral keypad, operator interface and local speed control. Basic set of less than forty programming parameters. Power ratings up to 10 Hp in 460V versions.

Performance Features	Control Modes	V/Hz
	Operator Interface Module	Integral Drive Mounted
	Display Lines	6-Character LED Display
	Programmable Preset Speeds	Four
	Analog Outputs	One (0-10 VDC)
	Auto Restart	Yes – Up to 5 attempts
	Frequency Avoidance	One Band
	Fault History	Last Four Faults
	Digital Inputs	Three Configurable Inputs
	Digital Inputs Type	Pull-Up
Drive Specifications	Analog Inputs: Two	0-10VDC, 0 to 20mA or 4 to 20mA
	Relay Outputs: One	One Built-in Form C Relay
	Analog Output / Digital Output	0-10 VDC: One Analog Usable for Meter (Freq., Current, Voltage) or Digital Output
	Maximum Load	10 Hp @ 460 VAC
	Overload Capacity	Drive Output 150% for one minute and 175% for 2 seconds
	Input Voltage Ranges	115 VAC (99-126); 230 VAC (198-264); 460 VAC (342-528)
	Rated Input Frequency	50-60Hz (±5%)
	Carrier Frequency	4-32 kHz (8 kHz default)
	Operating Temperature	–10° to 40°C
	Snubber (Dynamic Braking)	Built-in Transistor on Frames 2 and 3 only
	Dynamic Braking External	Up to 150% Dynamic Braking with appropriately sized resistor
	DC Injection Braking	Included
	Volts/Hz	Linear V/Hz, Energy Optimizer Function
	Frequency Control Range	0 - 500Hz
	Accel/Decel	Independently adjustable accel. & decel. ramps
	Time Range	0.1 to 600.0 Seconds
	Keypad Speed Control	Yes
	Sink/Source Inputs	Selectable, 24 VDC Logic
	Electronic Overload Trip	Electronic Motor Overload Inverse 150% for 1 minute or 175% for 2 seconds
	Communications	Built-in MODBUS-RTU (RS-485) Communications
	PI Control	Built-in
Protective Features	Under Voltage	Level Depends on Voltage Class (240, 480, or 575)
	Output Short Circuit	Phase-to-Phase on Drive Output
	Over Temperature	Heatsink Monitor
	DC Bus Overvoltage	DC Bus Level Trip
	Drive Overload	Exceed Drive rating of 150% for One Minute or 175% for 2 seconds
	Over Current	Over-current/short-Circuit protection
	Output Phase	Trips on open Output Phase
	Loss of Reference	Trips on Loss of Speed Command Signal
	Comm. Error	Detects a communication error (fault)
Agency Certifications		UL, cUL, CE, CCC, C-tick
Service Conditions	Altitude	1,000 m (3,300 ft.), derate by 1% per 100m up to 2,000m maximum
	Ambient Temperature	IP20: -10°C (14°F) to 40°C (102°F)
	Storage Temperature	-40°C (-40°F) to 60°C (140°F)
	Relative Humidity	10% to 95%, non-condensing
	Intermittent Overload	150% overload capacity for up to 1 minute, 175% overload capacity for up to 2 seconds

BALDOR

VS1MX – 115V, 50/60 Hz, 1-Phase Input (230V, 3-Phase Output) – NEMA 4X/12 (White Enclosure)

	Catalog Number	EMC Filter	Disconnect	Frame	Hp	Output Current	List Price	Mult. Sym.
◊	VS1MX10P5-4	No	No	A	0.5	2.3	643	EA
◊	VS1MX10P5-4D	No	Yes	A	0.5	2.3	707	EA
◊	VS1MX11-4	No	No	A	1	4.3	667	EA
◊	VS1MX11-4D	No	Yes	A	1	4.3	734	EA
◊	VS1MX11P5-4T	No	No	B	1.5	5.8	835	EA
◊	VS1MX11P5-4TD	No	Yes	B	1.5	5.8	919	EA

VS1MX – 115V, 50/60 Hz, 1-Phase Input (230V, 3-Phase Output) – NEMA 12 (Green Enclosure)

	Catalog Number	EMC Filter	Disconnect	Frame	Hp	Output Current	List Price	Mult. Sym.
◊	VS1MX10P5-2	No	No	A	0.5	2.3	591	EA
◊	VS1MX10P5-2D	No	Yes	A	0.5	2.3	650	EA
◊	VS1MX11-2	No	No	A	1	4.3	614	EA
◊	VS1MX11-2D	No	Yes	A	1	4.3	675	EA
◊	VS1MX11P5-2T	No	No	B	1.5	5.8	768	EA
◊	VS1MX11P5-2TD	No	Yes	B	1.5	5.8	845	EA

VS1MX – 230V, 50/60 Hz, 1-Phase Input (230V, 3-Phase Output) – NEMA 4X/12 (White Enclosure)

	Catalog Number	EMC Filter	Disconnect	Frame	Hp	Output Current	List Price	Mult. Sym.
◊	VS1MX80P5-4	No	No	A	0.5	2.3	559	EA
	VS1MX80P5-4F	Yes	No	A	0.5	2.3	615	EA
◊	VS1MX80P5-4D	No	Yes	A	0.5	2.3	615	EA
	VS1MX80P5-4DF	Yes	Yes	A	0.5	2.3	676	EA
◊	VS1MX81-4	No	No	A	1	4.3	580	EA
	VS1MX81-4F	Yes	No	A	1	4.3	638	EA
◊	VS1MX81-4D	No	Yes	A	1	4.3	638	EA
	VS1MX81-4DF	Yes	Yes	A	1	4.3	702	EA
◊	VS1MX82-4	No	No	A	2	7	726	EA
	VS1MX82-4F	Yes	No	A	2	7	799	EA
◊	VS1MX82-4D	No	Yes	A	2	7	799	EA
	VS1MX82-4DF	Yes	Yes	A	2	7	879	EA
◊	VS1MX82-4T	No	No	B	2	7	807	EA
	VS1MX82-4TF	Yes	Yes	B	2	7	888	EA
◊	VS1MX82-4TD	No	Yes	B	2	7	888	EA
	VS1MX82-4TDF	Yes	Yes	B	2	7	977	EA
◊	VS1MX83-4T	No	No	B	3	10.5	838	EA
	VS1MX83-4TF	Yes	No	B	3	10.5	921	EA
◊	VS1MX83-4TD	No	Yes	B	3	10.5	921	EA
	VS1MX83-4TDF	Yes	Yes	B	3	10.5	1,013	EA

◊ Stock Model Numbers

VS1MX – 230V, 50/60 Hz, 1-Phase Input (230V, 3-Phase Output) – NEMA 12 (Green Enclosure)

	Catalog Number	EMC Filter	Disconnect	Frame	Hp	Output Current	List Price	Mult. Sym.
◊	VS1MX80P5-2	No	No	A	0.5	2.3	514	EA
	VS1MX80P5-2F	Yes	No	A	0.5	2.3	566	EA
◊	VS1MX80P5-2D	No	Yes	A	0.5	2.3	566	EA
	VS1MX80P5-2DF	Yes	Yes	A	0.5	2.3	622	EA
◊	VS1MX81-2	No	No	A	1	4.3	534	EA
	VS1MX81-2F	Yes	No	A	1	4.3	587	EA
◊	VS1MX81-2D	No	Yes	A	1	4.3	587	EA
	VS1MX81-2DF	Yes	Yes	A	1	4.3	646	EA
◊	VS1MX82-2	No	No	A	2	7	668	EA
	VS1MX82-2F	Yes	No	A	2	7	735	EA
◊	VS1MX82-2D	No	Yes	A	2	7	735	EA
	VS1MX82-2DF	Yes	Yes	A	2	7	809	EA
◊	VS1MX82-2T	No	No	B	2	7	742	EA
	VS1MX82-2TF	No	No	B	2	7	817	EA
◊	VS1MX82-2TD	Yes	No	B	2	7	817	EA
	VS1MX82-2TDF	Yes	No	B	2	7	899	EA
◊	VS1MX83-2T	No	No	B	3	10.5	771	EA
	VS1MX83-2TF	Yes	No	B	3	10.5	848	EA
◊	VS1MX83-2TD	No	Yes	B	3	10.5	848	EA
	VS1MX83-2TDF	Yes	Yes	B	3	10.5	932	EA

VS1MX – 230V, 50/60 Hz, 3-Phase Input (230V, 3-Phase Output) – NEMA 4X/12 (White Enclosure)

	Catalog Number	EMC Filter	Disconnect	Frame	Hp	Output Current	List Price	Mult. Sym.
◊	VS1MX20P5-4	No	No	A	0.5	2.3	574	EA
◊	VS1MX20P5-4D	No	Yes	A	0.5	2.3	632	EA
◊	VS1MX21-4	No	No	A	1	4.3	632	EA
◊	VS1MX21-4D	No	Yes	A	1	4.3	653	EA
◊	VS1MX22-4	No	No	A	2	7	654	EA
◊	VS1MX22-4D	No	Yes	A	2	7	719	EA
◊	VS1MX22-4T	No	No	B	2	7	727	EA
	VS1MX22-4TF	Yes	No	B	2	7	719	EA
◊	VS1MX22-4TD	No	Yes	B	2	7	799	EA
	VS1MX22-4TDF	Yes	Yes	B	2	7	791	EA
◊	VS1MX23-4T	No	No	B	3	10.5	754	EA
	VS1MX23-4TF	Yes	No	B	3	10.5	829	EA
◊	VS1MX23-4TD	No	Yes	B	3	10.5	829	EA
	VS1MX23-4TDF	Yes	Yes	B	3	10.5	912	EA
◊	VS1MX25-4T	No	No	C	5	18	1,075	EA
	VS1MX25-4TF	Yes	No	C	5	18	1,183	EA
◊	VS1MX25-4TD	No	Yes	C	5	18	1,183	EA
	VS1MX25-4TDF	Yes	Yes	C	5	18	1,301	EA

◊ Stock Model Numbers

BALDOR

VS1MX – 230V, 50/60 Hz, 3-Phase Input (230V, 3-Phase Output) – NEMA 12 (Green Enclosure)

	Catalog Number	EMC Filter	Disconnect	Frame	Hp	Output Current	List Price	Mult. Sym.
◊	VS1MX20P5-2	No	No	A	0.5	2.3	527	EA
◊	VS1MX20P5-2D	No	Yes	A	0.5	2.3	580	EA
◊	VS1MX21-2	No	No	A	1	4.3	547	EA
◊	VS1MX21-2D	No	Yes	A	1	4.3	602	EA
◊	VS1MX22-2	No	No	A	2	7	601	EA
◊	VS1MX22-2D	No	Yes	A	2	7	661	EA
◊	VS1MX22-2T	No	No	A	2	7	668	EA
	VS1MX22-2TF	Yes	No	B	2	7	661	EA
◊	VS1MX22-2TD	No	Yes	A	2	7	734	EA
	VS1MX22-2TDF	Yes	Yes	B	2	7	728	EA
◊	VS1MX23-2T	No	No	B	3	10.5	693	EA
	VS1MX23-2TF	Yes	No	B	3	10.5	763	EA
◊	VS1MX23-2TD	No	Yes	B	3	10.5	763	EA
	VS1MX23-2TDF	Yes	Yes	B	3	10.5	839	EA

VS1MX – 460V, 50/60 Hz, 3-Phase Input (460V, 3-Phase Output) – NEMA 4X/12 (White Enclosure)

	Catalog Number	EMC Filter	Disconnect	Frame	Hp	Output Current	List Price	Mult. Sym.
◊	VS1MX41-4	No	No	A	1	2.2	699	EA
	VS1MX41-4F	Yes	No	A	1	2.2	769	EA
◊	VS1MX41-4D	No	Yes	A	1	2.2	769	EA
	VS1MX41-4DF	Yes	Yes	A	1	2.2	846	EA
◊	VS1MX42-4	No	No	A	2	4.1	845	EA
	VS1MX42-4F	Yes	No	A	2	4.1	930	EA
◊	VS1MX42-4D	No	Yes	A	2	4.1	930	EA
	VS1MX42-4DF	Yes	Yes	A	2	4.1	1,023	EA
◊	VS1MX42-4T	No	No	B	2	4.1	939	EA
	VS1MX42-4TF	Yes	No	B	2	4.1	1,033	EA
◊	VS1MX42-4TD	No	Yes	B	2	4.1	1,033	EA
	VS1MX42-4TDF	Yes	Yes	B	2	4.1	1,137	EA
◊	VS1MX43-4T	No	No	B	3	5.8	978	EA
	VS1MX43-4TF	Yes	No	B	3	5.8	1,075	EA
◊	VS1MX43-4TD	No	Yes	B	3	5.8	1,075	EA
	VS1MX43-4TDF	Yes	Yes	B	3	5.8	1,183	EA
◊	VS1MX45-4T	No	No	B	5	9.5	1,215	EA
	VS1MX45-4TF	Yes	No	B	5	9.5	1,337	EA
◊	VS1MX45-4TD	No	Yes	B	5	9.5	1,337	EA
	VS1MX45-4TDF	Yes	Yes	B	5	9.5	1,470	EA
◊	VS1MX47-4T	No	No	C	7.5	14	1,569	EA
	VS1MX47-4TF	Yes	No	C	7.5	14	1,726	EA
◊	VS1MX47-4TD	No	Yes	C	7.5	14	1,726	EA
	VS1MX47-4TDF	Yes	Yes	C	7.5	14	1,898	EA
◊	VS1MX410-4T	No	No	C	10	18	1,861	EA
	VS1MX410-4TF	Yes	No	C	10	18	2,047	EA
◊	VS1MX410-4TD	No	Yes	C	10	18	2,047	EA
	VS1MX410-4TDF	Yes	Yes	C	10	18	2,252	EA

◊ Stock Model Numbers

VS1MX – 460V, 50/60 Hz, 3-Phase Input (460V, 3-Phase Output) – NEMA 12 (Green Enclosure)

	Catalog Number	EMC Filter	Disconnect	Frame	Hp	Output Current	List	Mult. Sym.
◊	VS1MX41-2	No	No	A	1	2.2	643	EA
	VS1MX41-2F	Yes	No	A	1	2.2	707	EA
◊	VS1MX41-2D	No	Yes	A	1	2.2	707	EA
	VS1MX41-2DF	Yes	Yes	A	1	2.2	778	EA
◊	VS1MX42-2	No	No	A	2	4.1	777	EA
	VS1MX42-2F	Yes	No	A	2	4.1	855	EA
◊	VS1MX42-2D	No	Yes	A	2	4.1	855	EA
	VS1MX42-2DF	Yes	Yes	A	2	4.1	941	EA
◊	VS1MX42-2T	No	No	B	2	4.1	863	EA
	VS1MX42-2TF	Yes	No	B	2	4.1	950	EA
◊	VS1MX42-2TD	No	Yes	B	2	4.1	950	EA
	VS1MX42-2TDF	Yes	Yes	B	2	4.1	1,046	EA
◊	VS1MX43-2T	No	No	B	3	5.8	899	EA
	VS1MX43-2TF	Yes	No	B	3	5.8	989	EA
◊	VS1MX43-2TD	No	Yes	B	3	5.8	989	EA
	VS1MX43-2TDF	Yes	Yes	B	3	5.8	1,088	EA
◊	VS1MX45-2T	No	No	B	5	9.5	1,118	EA
	VS1MX45-2TF	Yes	No	B	5	9.5	1,230	EA
◊	VS1MX45-2TD	No	Yes	B	5	9.5	1,230	EA
	VS1MX45-2TDF	Yes	Yes	B	5	9.5	1,353	EA

◊ Stock Model Numbers

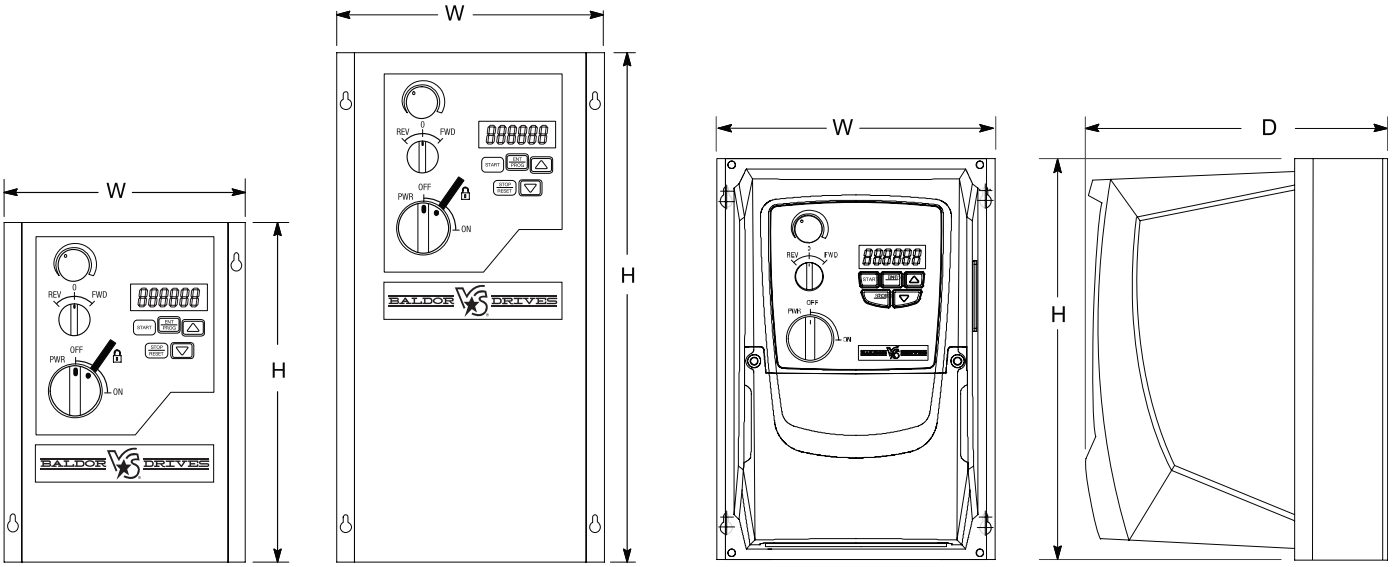

Mounting Dimensions - NEMA 12 (IP55)

Frame	Height Inches (mm)	Width Inches (mm)	Depth Inches (mm)
A	7.87 (200)	5.51 (140)	6.54 (166)
B	12.2 (310)	6.5 (165)	7.04 (180)

Mounting Dimensions - NEMA 4X (IP66)

Frame	Height Inches (mm)	Width Inches (mm)	Depth Inches (mm)
A	9.13 (232)	6.34 (161)	6.89 (175)
B	10.12 (257)	7.40 (178)	7.30 (185.5)
C	12.01 (305)	8.29 (210.5)	8.97 (227.8)

BALDOR

VS1ST and VS1MX – Accessories

Remote Keypad for the VS1ST & VS1MX

	Catalog Number	Description	List Price	Mult. Sym.
◊	VS1ST-RKEY3	VS1ST Remote Keypad with 3m cable	100	EA

◊ Stock Model Numbers

The VS1ST-RKEY3 Remote Keypad can be panel mounted for remote control or display of drive parameters. The kit comes standard with a 9 foot (3 meter) cable and is suitable for IP54 mounting. This keypad can be used with either the VS1ST or the VS1MX. Depending on the requirement of the application, VS1ST-RKEY3 can be used point to point or with multiple drives.

One Keypad with one drive

One Keypad with multiple drives

RS485 MODBUS RTU

Real Time Operation: Once the communication has been setup between the drive and VS1ST-RKEY3, the user can control the VS1ST-RKEY3 by using the control buttons on the front panel of the Remote Keypad.

Cable Kits for the VS1ST & VS1MX

To support a basic serial network, option cable assemblies and splitters are available.

	Catalog Number	Description	List Price	Mult. Sym.
◊	VS1ST-J45SP	RJ45 Cable Splitter	20	EA
◊	VS1ST-CBL0P5	1.5 ft. (0.5m) RJ45 Cable	10	EA
◊	VS1ST-CBL1	3 ft. (1m) RJ45 Cable	10	EA
◊	VS1ST-CBL3	9 ft. (3m) RJ45 Cable	10	EA

◊ Stock Model Numbers

The data cable splitter is a RJ45 1 to 2 way connection block that is suitable for multiple drives connected to a communication network.

Cables are available in three different lengths and come in blue.

RJ45 Copycat Loader for VS1ST and VS1MX

	Catalog Number	Description	List Price	Mult. Sym.
◊	VS1ST-CCL	VS1ST & VS1MX RJ45 Copycat Loader	25	EA

◊ Stock Model Numbers

This device allows uploading of drive parameters. Simply insert the device into the RJ45 port on the front of the VS1ST or VS1MX, press the upload button and you are done. Parameters are stored in memory and can be downloaded later or used to duplicate drive setup across a number of drives.

VS1ST and VS1MX – Accessories

VS1ST Dynamic Braking Resistors

VS1ST Frame B and C drives include built-in braking transistors to aid in applications requiring the ability to stop rapidly. The resistor kits are design for the VS1ST and mount internal to the drive. The drive software protects the brake kit from overload, there is no need for overload relays and an internal fusible element ensures fail safe operation.

	Catalog Number	Ohms	Wattage	Frame	List Price	Mult. Sym.
◊	VS1ST-R100W200	100	200	B & C	25	EA

◊ Stock Model Numbers

VS1ST & VS1MX Minimum Brake Resistor Values

Frame	Height Inches (mm)	Width Inches (mm)
110-115V	2	47 Ohms
200-240V	2 to 5	47 Ohms
380-480V	2 & 3	47 Ohms
	5	33 Ohms
	7.5 & 10	22 Ohms

VS1ST & VS1MX Brake Voltage Levels

Drive Voltage	Brake Turn Off Level	Brake Turn On Level
200-240V	378 Vdc	390 Vdc
380-480V	756 Vdc	780 Vdc

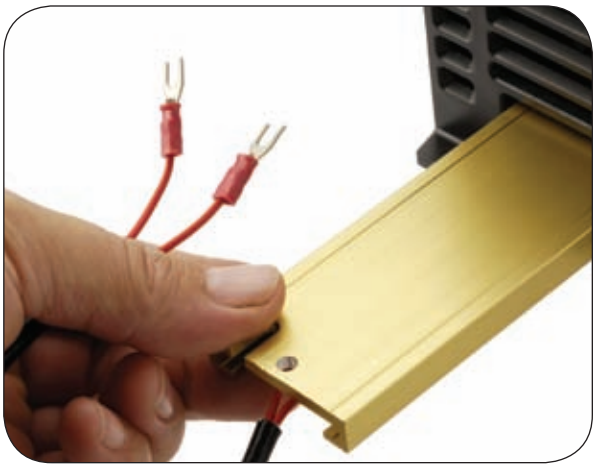

VS1MX Dynamic Braking Resistors

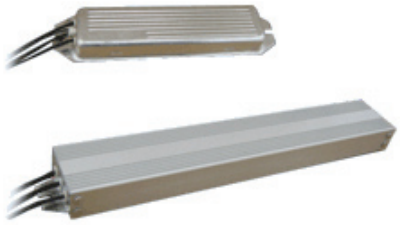

VS1MX Frame B and C drives include built-in braking transistors to aid in applications requiring the ability to stop rapidly. The resistor kits are design for the VS1mx and mount external to the drive. The drive software protects the brake kit from overload, there is no need for overload relays and an internal fusible element ensures fail safe operation.

	Catalog Number	Ohms	Wattage	Frame	List Price	Mult. Sym.
◊	VS1ST-R100W200	100	200	B & C	25	EA

◊ Stock Model Numbers

Rated continuous power is 200W with a peak power level of 12kW for 0.125 seconds.

Values for minimum brake resistance and brake voltage levels apply for both the VS1ST and VS1MX.

VS1MX IP55 Padlock

VS1MX NEMA 12 (IP55) drives are available with an input disconnect that has provisions for lockout. The padlock kit is designed for use with this drive and fits the provided locking mechanism.

	Catalog Number	Description	List Price	Mult. Sym.
◊	VS1MX-ILOCK	VS1MX IP55 Padlock	32	EA

◊ Stock Model Numbers

Note: This kit will not function with the NEMA 4X (IP66) version of the VS1MX as no lockout hole can be provided.

BALDOR

VS1ST and VS1MX – Accessories

VS1ST & VS1MX Field Bus Gateways

The Field Bus Gateways incorporate the Anybus Communicator and can connect a VS1ST or VS1MX to industrial networks. The communicator performs an intelligent conversion between the drive's serial protocol and the chosen industrial network.

	Catalog Number	Description	List Price	Mult. Sym.
◊	VS1ST-PBUS	Profibus Gateway Head	875	EA
◊	VS1ST-DNET	DeviceNet Gateway Head	875	EA

◊ Stock Model Numbers

VS1ST & VS1MX Brake Voltage Levels

Size	4.72 x 2.95 x 1.06" (L x W x H)
Power Supply	24V ± 10% Consumption: Max 280 mA on 24V Typically 100 mA
Temperature	Operating +0°C to 55°C Non-Operating -5°C to 85°C
Mounting	DIN-Rail
Protection Class	IP20
EMC Certif cation	CE marked, UL & cUL Conformance
Conformance	Tested and verified for fieldbus conformance

Each gateway module is pre-programmed for the default number of drives. The gateway can be configured to match the number of drives connected (up to the maximum). The configuration files are available upon request from Baldor Electric. There are 2 cables supplied with the Gateway, one is for connecting to an Optidrive Plus & VTC drive network (RJ11), the second is for connecting to a VS1ST or VS1MX network (RJ45).

VS1ST and VS1MX – Accessories

Relay & Control Board Option Cards

To provide additional capabilities for the VS1ST and VS1MX, add on option cards are available. These include both I/O expansion and 115 or 230VAC control logic interface boards.

	Catalog Number	Description	List Price	Mult. Sym.
◊	**VS1ST-2ROUT**	Provides one additional relay output for the drive	140	EA
◊	**VS1ST-HVAC**	Provides two relays for “drive running” & “drive tripped”	120	EA
◊	**VS1ST-LOGHV-11**	115 VAC control logic input card	120	EA
◊	**VS1ST-LOGHV-23**	230 VAC control logic input card	120	EA

◊ Stock Model Numbers

HVAC & 115/230 VAC Control Board

2nd Relay Output Module

Technical Specifications

Size	56 x 33 x 14mm (L x W x H)
Max relay switching voltage:	250V AC / 220V DC
Max relay switching current:	1 A
Temperature:	Operating – 10°C to +50°C
Protection Class:	IP20
Conformity:	IP00, UL94V-0

HVAC Relay Option Module

The HVAC Relay Option Module can be used in applications where two indicators are required showing “drive running” and “drive tripped”. The first relay output (fitted within the drive) is programmed using P-22. When programmed as a fault relay the second relay output (that indicates a run condition in the drive) is enabled. Relay 2 is closed when the drive is running.

Relay 2 (J3) closed on enable
(Green Light - Drive running)

Relay 1 (J1) closed when drive tripped
(Red Light)

HVAC Relay Option Module

The Second Relay Output Module can be used in applications where the analog/digital output from the drive is converted to a relay output. Typical applications are where two relay outputs are required. The functions of the relays are programmable in the drive and can be programmed as drive enabled, drive healthy, drive at set speed, drive at zero speed, drive at max speed or motor in overload.

115 & 230 VAC Control Interface Module

This Option Module is designed for use with the VS1ST and VS1MX range of drives, to allow the digital inputs to be controlled directly from a 110 Volt or 230 Volt control supply without the need for interfacing relays. There are two versions of the module, a 110 Volt version for voltages ranging from 100 – 120 VAC, and a 230 volt version for voltages ranging from 200 – 240VAC.

The existing analog input on the VS1ST can still be used, by connecting the analog signal input on terminal 6, or alternatively a fourth 110 / 230VAC digital input can be connected via the removable plug.

BALDOR

VS1STS 600V Starter Style AC Micro Drive

1 thru 60 Hp **500-600 VAC** **3 Phase - 50/60 Hz**

Product Highlights: The VS1STS is a feature rich V/Hz & Sensorless Vector product targeted at the 600V market and equipment manufacturing applications.

Applications: Variable torque, constant torque or constant horsepower applications. New installations, replacements and original equipment manufactures (OEM).

Features: V/Hz and Sensorless Vector Control with peak overload capacity of 175% and PID capability. Flexible mounting options with IP20 enclosure as standard and DIN rail capability. Integral keypad, operator interface and local speed control. Basic setup parameter list and advanced software settings. Built-in braking transistor allows connection to remote braking resistor for enhanced performance needs. Power ratings up to 60 Hp at 600V, pluggable I/O terminal strip.

Performance Features	Control Modes	V/Hz & Sensorless Vector Control
	Operator Interface Module	Integral Drive Mounted; basic start/stop, forward/reverse and speed control
	Display Lines	6-Character LED Display
	Programmable Preset Speeds	Eight
	Analog Output: One	0-10VDC or 20mA
	Auto Restart	Yes -- Up to 5 attempts
	Frequency Avoidance	One Band
	Fault Indicators	16 Fault Codes
	Digital Inputs: Four	Two programmable digital inputs, two user selectable analog/digital inputs
	Digital Inputs Type	Pull-Up
Drive Specifications	Analog Inputs: Two	One bi-polar and one 0-10VDC, 0 to 20mA or 4 to 20mA
	Relay Output: One	Built-in Form C Relay, normally open contact
	Analog Output/Digital: One	0-10 VDC: One Analog Usable for Meter (Freq., Current, Voltage) or Digital Output
	Maximum Load:	60 HP @ 600 VAC
	Overload Capacity	Drive Output 150% for one minute and 175% for 2 seconds
	Input Voltage Ranges:	500 - 600VAC
	Input Voltage Tolerance	10% / -10%
	Rated Input Frequency	50-60Hz (±5%)
	Carrier Frequency:	4-32 kHz (8 kHz default)
	Operating Temperature:	-10° to 50°C
	Snubber (Dynamic Braking):	Built-in Transistor
	Dynamic Braking External:	Up to 150% Dynamic Braking with appropriately sized resistor
	DC Injection Braking:	Included
	Volts/Hz	Linear V/Hz
		Energy Optimization Function
	Sensorless Vector	Full Sensorless Vector Control with Autotune and motor model
	Frequency Control Range:	0 - 2000Hz
	Accel/Decel:	Independently adjustable accel. & decel. ramps
	Keypad Speed Control	Yes
	Sink/Source Inputs	Selectable, 24 VDC Logic
	Electronic Overload Trip	Electronic Motor Overload Inverse 150% for 1 minute or 175% for 2 seconds
Protective Features	Under Voltage	Level Depends on Voltage Class (600V)
	Output Short Circuit	Phase-to-Phase on Drive Output
	Over Temperature	Heatsink Monitor
	DC Bus Overvoltage	DC Bus Level Trip
	Drive Overload	Exceed Drive rating of 150% for One Minute or 175% for 2 seconds
	Over Current	Over-current/short-Circuit protection
	Output Phase	Trips on open Output Phase
	Loss of Reference	Trips on Loss of Speed Command Signal
	Communication Error	Detects a communication error (fault)
Agency Certifications		UL, cUL, CE, CCC, C-tick
Service Conditions	Altitude:	1,000 m (3,300 ft.) Maximum
	Ambient Temperature:	IP20: -10°C to 50°C
	Storage Temperature:	-20°C to 60°C
	Relative Humidity:	10% to 90%, non-condensing
	Intermittent Overload:	150% overload capacity for up to 1 minute
		175% overload capacity for up to 2 seconds

VS1STS – 500-600V ±10% 3-Phase Input

	Catalog Number	Frame	Hp	kW	Output Current	List Price	Mult. Sym.
◊	**VS1STS51**	B	1	0.75	1.7	$851	EA
◊	**VS1STS52**	B	2	1.5	3.1	$957	EA
◊	**VS1STS53**	B	3	2.2	4.1	$1,064	EA
◊	**VS1STS55**	B	5	4	6.1	$1,277	EA
◊	**VS1STS57**	B	7.5	5.5	9	$1,596	EA
◊	**VS1STS510**	C	10	7.5	14	$1,915	EA
◊	**VS1STS515**	C	15	11	18	$2,340	EA
◊	**VS1STS520**	C	20	15	24	$2,979	EA
◊	**VS1STS530**	D	30	22	39	$4,681	EA
◊	**VS1STS540**	D	40	30	46	$5,319	EA
◊	**VS1STS560**	D	60	45	62	$6,383	EA

◊ Stock Model Numbers

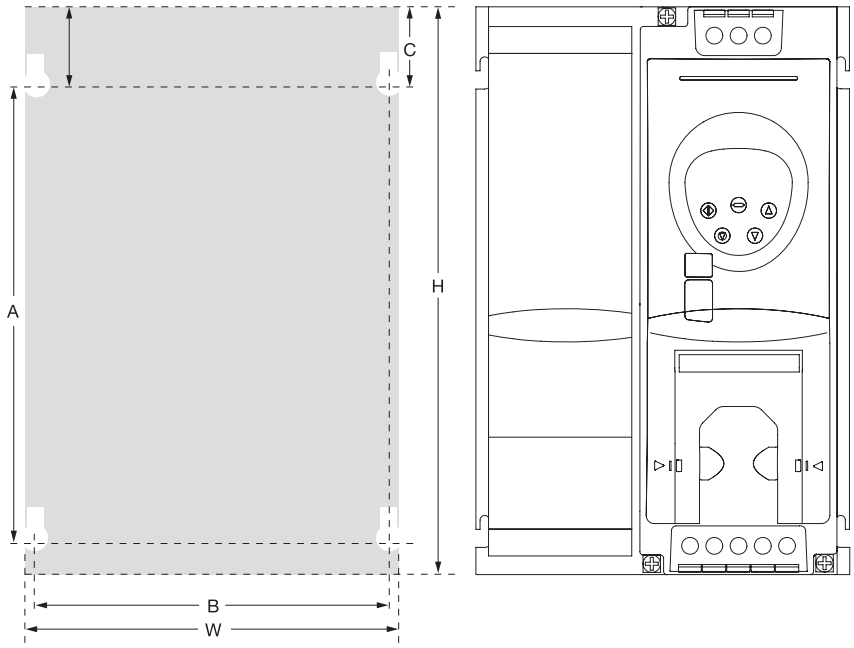

Mounting Dimensions

Frame	Height Inches (mm)	Width Inches (mm)	Depth Inches (mm)
A	10.24 (260)	3.94 (100)	6.89 (175)
B	10.24 (260)	6.73 (171)	6.89 (175)
C	20.47 (520)	13.39 (340)	8.66 (220)

BALDOR

VS1MXS 600V Harsh Duty AC Micro Drive

1 thru 7.5 Hp **500-600 VAC** **3 Phase - 50/60 Hz**

Product Highlights: The VS1MXS is a feature rich V/Hz & Sensorless Vector product targeted at the 600V market and harsh duty applications.

Applications: Variable torque, constant torque or constant horsepower applications. New installations, replacements and original equipment manufactures (OEM).

Features: V/Hz and Sensorless Vector Control with peak overload capacity of 175% and PID capability. Flexible mounting options with IP55 (NEMA 12) enclosure as standard. Integral keypad, operator interface and local speed control. Basic setup parameter list and advanced software settings. Built-in braking transistor allows connection to remote braking resistor for enhanced performance needs. Power ratings up to 60 HP at 600V, pluggable I/O terminal strip.

Performance Features	Control Modes	V/Hz & Sensorless Vector Control
	Operator Interface Module	Integral Drive Mounted; basic start/stop, forward/reverse and speed control
	Display Lines	6-Character LED Display
	Programmable Preset Speeds	Eight
	Analog Output: One	0-10VDC or 20mA
	Auto Restart	Yes -- Up to 5 attempts
	Frequency Avoidance	One Band
	Fault Indicators	16 Fault Codes
	Digital Inputs: Four	Two programmable digital inputs, two user selectable analog/digital inputs
	Digital Inputs Type	Pull-Up
Drive Specifications	Analog Inputs: Two	One bi-polar and one 0-10VDC, 0 to 20mA or 4 to 20mA
	Relay Output: One	Built-in Form C Relay, normally open contact
	Analog Output/Digital: One	0-10 VDC: One Analog Usable for Meter (Freq., Current, Voltage) or Digital Output
	Maximum Load:	60 HP @ 600 VAC
	Overload Capacity	Drive Output 150% for one minute and 175% for 2 seconds
	Input Voltage Ranges	500 - 600VAC
	Input Voltage Tolerance	10% / -10%
	Rated Input Frequency	50-60Hz (±5%)
	Carrier Frequency	4-32 kHz (8 kHz default)
	Operating Temperature	-10° to 50°C
	Snubber (Dynamic Braking)	Built-in Transistor
	Dynamic Braking External	Up to 150% Dynamic Braking with appropriately sized resistor
	DC Injection Braking	Included
	Volts/Hz	Linear V/Hz
		Energy Optimization Function
	Sensorless Vector	Full Sensorless Vector Control with Autotune and motor model
	Frequency Control Range	0 - 2000Hz
	Accel/Decel:	Independently adjustable accel. & decel. ramps
	Keypad Speed Control	Yes
	Sink/Source Inputs	Selectable, 24 VDC Logic
	Electronic Overload Trip	Electronic Motor Overload Inverse 150% for 1 minute or 175% for 2 seconds
	Communications	Built-in MODBUS-RTU (RS-485) Communications, RJ11 connection
	PID Control	Built-in with sleep/wake function
Protective Features	Under Voltage	Level Depends on Voltage Class (600V)
	Output Short Circuit	Phase-to-Phase on Drive Output
	Over Temperature	Heatsink Monitor
	DC Bus Overvoltage	DC Bus Level Trip
	Drive Overload	Exceed Drive rating of 150% for One Minute or 175% for 2 seconds
	Over Current	Over-current/short-Circuit protection
	Output Phase	Trips on open Output Phase
	Loss of Reference	Trips on Loss of Speed Command Signal
	Communication Error	Detects a communication error (fault)
Agency Certifications		UL, cUL, CE, CCC, C-tick
Service Conditions	Altitude	1,000 m (3,300 ft.) Maximum
	Ambient Temperature	IP20: -10°C to 50°C
	Storage Temperature:	-20°C to 60°C
	Relative Humidity	10% to 90%, non-condensing
	Intermittent Overload	150% overload capacity for up to 1 minute
		175% overload capacity for up to 2 seconds

VS1MXS – 500-600V ±10% 3-Phase Input

	Catalog Number	Frame	Hp	kW	Output Current	List Price	Mult. Sym.
◊	VS1MXS51	B	1	0.75	1.7		EA
◊	VS1MXS52	B	2	1.5	3.1		EA
◊	VS1MXS53	B	3	2.2	4.1		EA
◊	VS1MXS55	B	5	4	6.1		EA
◊	VS1MXS57	B	7.5	5.5	9		EA

◊ Stock Model Numbers

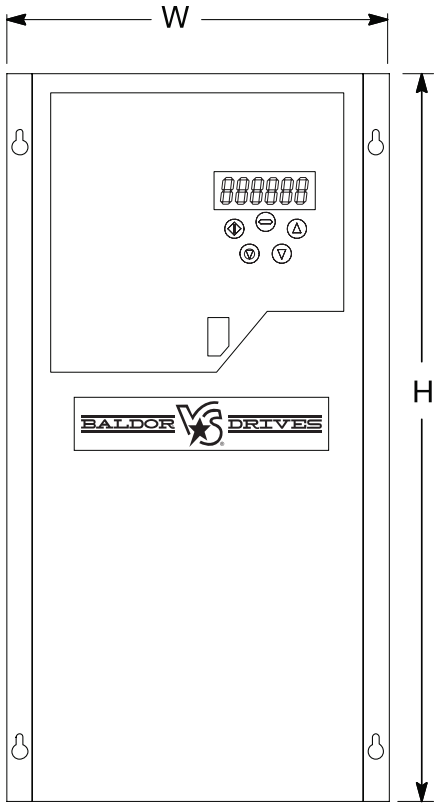

Mounting Dimensions

Frame	Height Inches (mm)	Width Inches (mm)	Depth Inches (mm)
B	12.2 (310)	6.46 (164)	7.09 (180)

BALDOR

VS1STS and VS1MXS – Accessories

Remote Keypad for the VS1STS & VS1MXS

	Catalog Number	Description	List Price	Mult. Sym.
◊	**VS1STS-RKEY3**	VS1STS Remote Keypad with 3m cable		EA

◊ Stock Model Numbers

The VS1STS-RKEY3 Remote Keypad can be panel mounted for remote control or display of drive parameters. The kit comes standard with a 9 foot (3 meter) cable and is suitable for IP54 mounting. This keypad can be used with either the VS1STS or the VS1MXS. Depending on the requirement of the application, VS1STS-RKEY3 can be used point to point or with multiple drives.

One Keypad with one drive

One Keypad with multiple drives

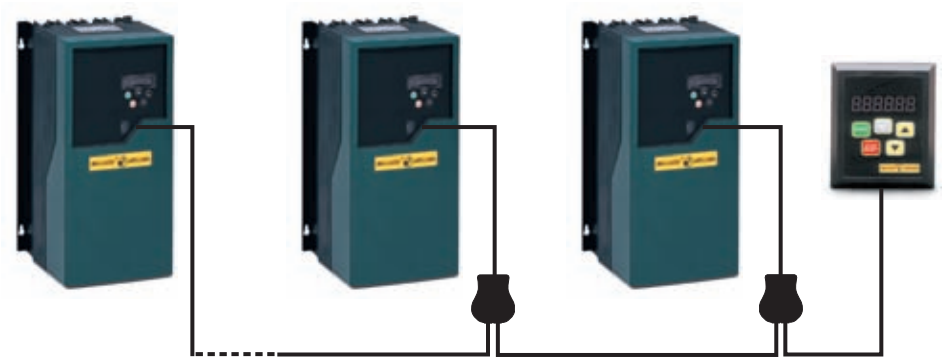

Real Time Operation: Once the communication has been setup between the drive and VS1STS-RKEY3, the user can control the VS1ST-RKEY3 by using the control buttons on the front panel of the Remote Keypad.

Cable Kits for the VS1STS & VS1MXS

To support a basic serial network, option cable assemblies and splitters are available.

	Catalog Number	Description	List Price	Mult. Sym.
◊	**VS1STS-J11SP**	RJ45 Cable Splitter		EA
◊	**VS1STS-CBL0P3**	1 ft. (0.3m) RJ11 Cable		EA
◊	**VS1STS-CBL1**	3 ft. (1m) RJ11 Cable		EA
◊	**VS1STS-CBL3**	9 ft. (3m) RJ11 Cable		EA

◊ Stock Model Numbers

The data cable splitter is a RJ45 1 to 2 way connection block that is suitable for multiple drives connected to a communication network.

Cables are available in three different lengths and come in blue.

VS1SM
AC Micro Drive

1/2 thru 3 Hp 230 VAC 1 Phase - 50/60 Hz Input / 3 Phase Output

Applications: Variable torque, constant torque or constant horsepower applications. New installations, replacements and original equipment manufactures (OEM).

Features: Volts per Hertz or Sensorless Vector Control with peak overload capacity of 200%, PID capability and built in MODBUS RS-485 Communications. Integral keypad, operator interface and local speed control. Programming by Groups makes it easy to navigate and find parameters. Basic Program Group contains the most common application related parameters. Power ratings up to 3 Hp 230V Single Phase. Available with or without built in CE Filters. Built-in braking transistor allows connection to remote braking resistor for enhanced performance needs.

Performance Features	Control Modes	V/Hz or Sensorless Vector
	Operator Interface Module	Integral Drive Mounted
	Display Lines	3-Character LED Display
	Programmable Preset Speeds	Eight
	Analog Outputs	One (0-10 VDC)
	Local Speed Control	Built-in Speed Potentiometer
	Auto Restart	Yes – Up to 10 attempts
	Frequency Avoidance	Three Bands
	Fault History	Last Five Faults
	Digital Inputs	Five Completely Configurable Inputs
	Digital Inputs Type	Pull-up or Pull-down
Drive Specifications	Analog Inputs: Two Total	One: 0-10VDC; One: 4-20mADC
	Digital Outputs: Two Total	One Opto-coupled (Configurable); Form C Relay
	Meter Outputs	0-10 VDC: One Analog Usable for Meter (Freq., Current, Voltage, DC Voltage)
	Maximum Load	3 Hp @ 230VAC
	Overload Capacity	Drive Output 150% for One Minute
	Frequency Accuracy	Digital Command: 0.01% of Max. Output Frequency; Analog Command: 0.1% of Max. Output Frequency
	Input Voltage Ranges	190-253VAC - 1-Phase
	Rated Input Frequency	50-60Hz (±5%)
	Carrier Frequency	1-15 kHz (3 kHz default)
	Operating Temperature	–10° to 50°C (IP20)
	Snubber (Dynamic Braking)	Use External Braking Unit
	Dynamic Braking External	Dynamic Braking via External Braking Unit connected to DC bus.
	DC Injection Braking	Included
	Volts/Hz	Linear V/Hz; Quadratic V/Hz; Custom 4-point V/Hz Curve
	Sensorless Vector	Full Sensorless Vector; Control with Autotune Function and motor model
	Frequency Control Range	0-400 Hz
	Accel/Decel	Eight independently adjustable sets of ramps
	Time Range	0.1 to 6000 Seconds
	S Curve Accel. & Decel.	Yes, with adjustable rounding percentage
	Keypad Speed Control	Yes
	Sink/Source Inputs	Selectable, 24 VDC Logic
	Electronic Overload Trip	Electronic motor Overload Inverse Time calculation with program warning level
	Communications	Built-in MODBUS-RTU (RS-485) Communications
	PID Control	Built-in
Protective Features	Under Voltage	Level Depends on Voltage Class (240, 480)
	Ground Fault Protection	Ground Fault protection active during run
	Output Short Circuit	Phase-to-Phase on Drive Output
	Over Temperature	Heatsink Monitor
	DC Bus Overvoltage	DC Bus Level Trip
	Drive Overload	Exceed Drive rating of 150% for one minute
	Over Current	Over-current/short-Circuit protection
	Output Phase	Trips on open Output Phase
	Loss of Reference	Trips on Loss of Speed Command Signal
	Cooling Fan	Detects an inverter fan failure (replace fan)
Agency Certifications	Listings	UL, cUL, CE
Service Conditions	Altitude	1,000 m (3,300 ft.), derate by 1% per 100 m up to 2,000m maximum.
	Ambient Temperature	IP20: -10°C (14°F) to 50°C (122°F)
	Storage Temperature	-20°C (-2°F) to 65°C (149°F)
	Relative Humidity	10% to 95%, non-condensing

BALDOR

VS1SM – 230V, 50/60 Hz, 1-Phase Input (230V, 3-Phase Output)

	Catalog Number	EMC Filter	Frame	Hp (Normal Duty)	Output Current	List	Mult. Sym.
◊	**VS1SM80P5**	No	A	0.5	2.5A	319	EA
◊	**VS1SM80P5-F**	Yes	A	0.5	2.5A	372	EA
◊	**VS1SM81**	No	A	1	5.0A	394	EA
◊	**VS1SM81-F**	Yes	A	1	5.0A	447	EA
◊	**VS1SM82**	No	B	2	8.0A	500	EA
◊	**VS1SM82-F**	Yes	B	2	8.0A	553	EA
◊	**VS1SM83**	No	B	3	12.0A	638	EA
◊	**VS1SM83-F**	Yes	B	3	12.0A	702	EA

◊ Stock Model Numbers

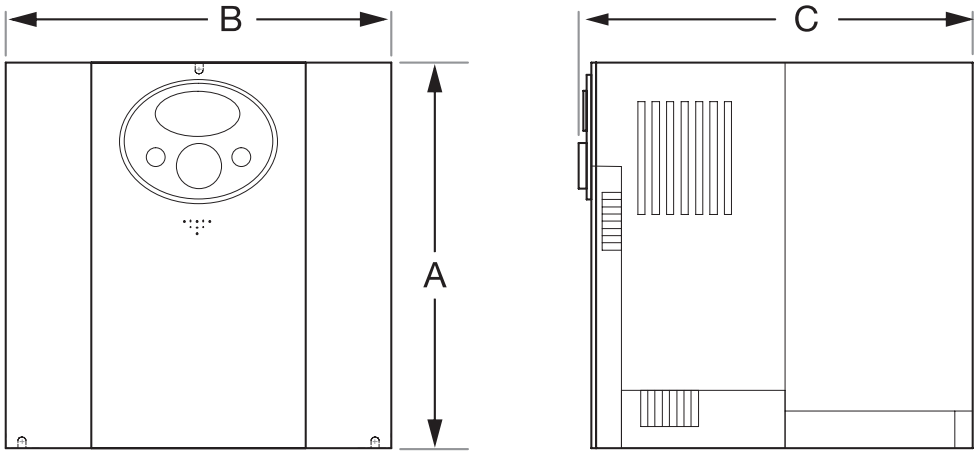

Mounting Dimensions

Frame	Height Inches (mm)	Width Inches (mm)	Depth Inches (mm)	Weight lbs (kg)
A	5.63 (143)	3.11 (79)	5.63 (143)	1.96 (0.89)
A (with Filter)	5.63 (143)	3.11 (79)	5.63 (143)	2.14 (0.97)
B	5.63 (143)	6.14 (156)	5.64 (143)	4.08 (1.85)
B (with Filter)	5.63 (143)	6.14 (156)	5.64 (143)	4.41 (2.0)

VS1PF Pump and Fan AC Drive

7.5 thru 40 Hp	**230 VAC**	**3 Phase - 50/60 Hz**
7.5 thru 700 Hp	**460 VAC**	**3 Phase - 50/60 Hz**
7.5 thru 150 Hp	**600 VAC**	**3 Phase - 50/60 Hz**

Applications: Pump and Fan AC Drive Applications (both Variable and Constant Torque) from 5 to 700 Hp.

Features: Nema 1 enclosure as standard up to 15Hp. IP00 with NEMA 1 enclosure Kits available from 20 Hp to 125 Hp. IP00 as standard over 125 Hp. Integral keypad and plain English 2-line display including UP/DOWN keys to adjust speed reference. Dual PID control loops. External DBU Dynamic Braking kits connect to remote braking resistor for enhanced performance needs. Sleep/Wake Function – Ability to disable/re-enable drives automatically as demand dictates. Energy Savings Function Power Dip Ride-thru. Flying Start Function.

Input Ratings	Voltage	230	460	600
	Voltage Range	170-253	323-528	446-660
	Phase	3 Phase (single phase with 50% derate)		
	Frequency	50/60 Hz +5%		
Output Ratings	Horsepower	7.5-40 Hp @ 230VAC, 3 PH; 7.5-700 Hp @ 460VAC, 3 PH; 7.5-150 Hp @ 600VAC, 3 PH		
	Overload Capacity	Heavy Duty (Constant Torque) = 150% for 60 seconds, 180% for 4 seconds		
		Normal Duty (Variable Torque) = 110% for 60 seconds and 130% for 4 seconds.		
	Frequency	0-120 Hz		
	Voltage	0 to maximum input voltage (RMS)		
Protective Features	Trip	Missing control power, over current, over voltage, under voltage, over temperature (motor or control), output shorted or grounded, motor overload		
	External Output	LED trip condition indicators, 5 assignable logic outputs, 2 assignable analog outputs		
	Short Circuit	Phase to phase, phase to ground		
Environmental Conditions	Temperature	-10 to 40°C. Derate 2% per °C to maximum ambient temperature of 50°C.		
	Cooling	Forced air		
	Enclosure	NEMA 1 and IP00		
	Altitude	Sea level to 3300 Feet (1000 Meters) Derate 2% per 1000 Feet (303 Meters) above 3300 Feet		
	Humidity	10 to 95% RH Non-Condensing		
	Storage Temperature	-40 to +70°C		
Keypad Display	Display	16 character x 2-line, plain-English alpha-numeric display		
	Keys	9 key membrane with tactile response		
	Functions	Output status monitoring, Digital speed control, Parameter setting and display, Diagnostic and Fault log display, Motor run and jog, Local/Remote toggle		
	LED Indicators	Forward run command, Reverse run command, Stop command		
	Remote Mount	4,000 foot distance		
	Trip	Separate message and trace log for each trip, last 5 trips retained in memory		
Control Specifications	Control Method	Microprocessor controlled PWM output, selectable encoderless vector or V/Hz inverter		
	Sleep / Wake Function	Ability to disable/re-enable drive automatically as demand dictates		
	Programmable Preset Speeds	Sixteen		
	Accel/Decel	0-6000 seconds, linear, S-Curve, U-Curve		
	Energy Savings Function	Automatic Mode		
	Frequency Control Range	0-120 Hz		
	Frequency Avoidance	3 Bands		
	Selectable Operating Modes	Keypad, 2-Wire, 3-Wire, 16 Preset Speeds, Fan Pump, Process Control.		
Analog Inputs	Two total	One: 0-10VDC or -10 to 10VDC		
		One: 4-20mADC		
Analog Outputs	Two	Two: 0-12 VDC		
Digital Inputs	Pull - up or Pull - down	8 Completely Configurable Inputs		
Digital Outputs	Five Total	Four Form A Relays		
		One Form C Relay		

BALDOR

Drive Specifications

- DC Injection Braking:
  Included
- Volts/Hz
  Linear V/Hz
  Quadratic V/Hz
  Custom 4-point V/Hz Curve
- Sensorless Vector:
  Full Sensorless Vector
  Control with Autotune Function
  and motor model
- Frequency Control Range:
  0-120 Hz
- Accel/Decel:
  Eight independently adjustable sets of ramps
- Time Range:
  - 0 to 6000 Seconds
- S Curve Accel. & Decel.
  Yes
- Keypad Speed Control
  Yes
- Sink/Source Inputs
  Selectable, 24 VDC Logic
- Electronic Overload Trip
  Electronic Motor Overload Inverse
  Time calculation with Programmable Warning Level
- Communications
  Built In MODBUS-RTU (RS-485) Communications
  Optional DeviceNet Communications
  Optional Profibus Communications
  Optional Lonworks Communications
  Optional BACnet Communications
  Optional Metasys-N2 Communications
  Modbus TCP/IP
- PID Control
  Built-in
  Dual / Cascade Functions available

Protective Features

- Under Voltage
  Level Depends on Voltage Class
  (230 or 460V or 600V)
- Ground Fault Protection
  Ground Fault protection active during run
- Output Short Circuit
  Phase-to-Phase on Drive Output
- Over Temperature
  Heatsink Monitor
- DC Bus Overvoltage
  DC Bus Level Trip
- Drive Overload
  Exceed Drive rating of 110% for
  One Minute
- Over Current
  Over-current/short-Circuit protection
- Output Phase
  Trips on open Output Phase
- Loss of Reference
  Trips on Loss of Speed Command Signal
- Cooling Fan
  Detects an inverter fan failure (replace fan)

Agency Certifications

- Listings
  - UL, cUL, CE

VS1PF 600V – Drive Ratings and Pricing

Catalog Number	Input Volt	Frame Volt	Output						List	Mult.
			Normal Duty			Heavy Duty				
			Hp	kW	Continuous Amps	Hp	kW	Continuous Amps		
◊ VS1PF57-1	600V	A	7.5	5.5	9	5	3.7	6.1	1,345	EB
◊ VS1PF510-1	600V	A	10	7.5	12	7.5	5.5	9	1,638	EB
◊ VS1PF515-1	600V	A	15	11	17	10	7.5	12	1,756	EB
◊ VS1PF520-1	600V	C	20	15	23	15	11	17	2,177	EB
◊ VS1PF525-9	600V	C	25	18.5	27	20	15	23	2,574	EB
◊ VS1PF530-9	600V	E	30	22	34	25	18.5	27	3,394	EB
◊ VS1PF540-9	600V	E	40	30	43	30	22	34	4,095	EB
◊ VS1PF550-9	600V	H	50	37	55	40	30	43	4,915	EB
◊ VS1PF560-9	600V	H	60	45	64	50	37	55	6,320	EB
◊ VS1PF575-9	600V	H	75	55	80	60	45	64	7,607	EB
◊ VS1PF5100-9	600V	L	100	75	104	75	55	80	8,543	EB
◊ VS1PF5125-9	600V	L	125	90	128	100	75	104	10,531	EB
◊ VS1PF5150-9L	600V	N	150	110	150	125	90	128	12,170	EB

◊ Stock Model Numbers

VS1PF – Drive Ratings – 230V and 460V

Catalog Number	Normal Duty HP	Normal Duty kW	Continuous Normal Duty Amps	Heavy Duty HP	Heavy Duty kW	Continuous Heavy Duty Amps	Frame
230Vac Input							
VS1PF27-1	7.5	5.5	24	5	3.7	17	A
VS1PF210-1	10	7.5	32	7.5	5.5	23	B
VS1PF215-1	15	11	46	10	7.5	33	B
VS1PF220-9	20	15	60	15	11	44	C
VS1PF225-9	25	18.5	74	20	15	54	C
VS1PF230-9	30	22	88	25	18.5	68	E
VS1PF240-9	40	30	115	30	22	84	E
460Vac Input							
VS1PF47-1	7.5	5.5	12	5	3.7	8	A
VS1PF410-1	10	7.5	16	7.5	5.5	11	B
VS1PF415-1	15	11	24	10	7.5	17	B
VS1PF420-9	20	15	30	15	11	22	C
VS1PF420-9L*	20	15	30	15	11	24	D
VS1PF425-9	25	18.5	39	20	15	28	C
VS1PF425-9L*	25	18.5	39	20	15	30	D
VS1PF430-9	30	22	45	25	18.5	34	E
VS1PF430-9L*	30	22	45	25	18.5	39	F
VS1PF440-9	40	30	61	30	22	44	E
VS1PF440-9L*	40	30	61	30	22	45	F
VS1PF450-9	50	37	75	40	30	55	G
VS1PF450-9L*	50	37	75	40	30	55	J
VS1PF460-9	60	45	91	50	37	66	G
VS1PF460-9L*	60	45	91	50	37	66	J
VS1PF475-9	75	55	110	60	45	80	H
VS1PF475-9L*	75	55	110	60	45	80	K
VS1PF4100-9	100	75	152	75	55	111	L
VS1PF4100-9L*	100	75	152	75	55	111	M
VS1PF4125-9	125	90	183	100	75	134	L
VS1PF4125-9L*	125	90	183	100	75	134	M
VS1PF4150-9L*	150	110	223	125	90	164	N
VS1PF4200-9L*	200	132	264	150	110	194	N
VS1PF4250-9L*	250	160	325	200	132	240	P
VS1PF4300-9L*	300	200	413	250	160	317	R
VS1PF4350-9L*	350	220	432	250	160	317	R
VS1PF4400-9L*	400	280	547	300	200	401	R
VS1PF4500-9	500	315	613	350	220	450	S
VS1PF4600-9	600	375	731	400	280	536	T
VS1PF4700-9	700	450	877	500	315	643	T

* Built-In DC Link Inductor

Instruction Manuals

VS1PF Manual:	MN763
VS1PF Quick Start Guide:	MS763
VS1PF DBU Manual:	MN763DB
VS1PF Data Sheet:	FL763
VS1PFB Brochure:	FL768

Service Conditions

Altitude:	1,000 m (3,300 ft.) Maximum
Ambient Temperature:	-10°C (14°F) to 40°C (104°F)
Storage Temperature:	-20°C (-2°F) to 65°C (149°F)
Relative Humidity:	10% to 95%, non-condensing
Intermittent Overload:	150% overload capacity for up to 1 minute (Heavy Duty) 110% overload capacity for up to 1 minute (Normal Duty)

BALDOR

VS1PF – Dimensions and Weights – 230V and 460V

Catalog Number	Dimensions In (mm)					Weight	
	A	A1	B	B1	C	lb	kg
VS1PF27-1	11.18 (284)	10.69 (269)	5.91 (150)	5.12 (130)	6.16 (156)	10.80	4.90
VS1PF210-1	11.18 (284)	10.69 (269)	7.87 (200)	7.09 (180)	7.16 (182)	13.20	6.00
VS1PF215-1	11.18 (284)	10.69 (269)	7.87 (200)	7.09 (180)	7.16 (182)	13.20	6.00
VS1PF220-9	15.16 (385)	14.57 (370)	9.84 (250)	9.06 (230)	7.91 (201)	28.70	13.00
VS1PF225-9	15.16 (385)	14.57 (370)	9.84 (250)	9.06 (230)	7.91 (201)	28.70	13.00
VS1PF230-9	18.11 (460)	17.52 (445)	11.97 (304)	11.18 (284)	9.21 (234)	44.10	20.00
VS1PF240-9	18.11 (460)	17.52 (445)	11.97 (304)	11.18 (284)	9.21 (234)	44.10	20.00
VS1PF47-1	11.18 (284)	10.69 (269)	5.91 (150)	5.12 (130)	6.16 (156)	10.80	4.90
VS1PF410-1	11.18 (284)	10.69 (269)	7.87 (200)	7.09 (180)	7.16 (182)	13.20	6.00
VS1PF415-1	11.18 (284)	10.69 (269)	7.87 (200)	7.09 (180)	7.16 (182)	13.20	6.00
VS1PF420-9	15.16 (385)	14.57 (370)	9.84 (250)	9.06 (230)	7.91 (201)	27.60	12.50
VS1PF420-9L	15.88 (403)	15.43 (392)	9.84 (250)	7.32 (186)	10.28 (260)	42.90	19.50
VS1PF425-9	15.16 (385)	14.57 (370)	9.84 (250)	9.06 (230)	7.91 (201)	27.60	12.50
VS1PF425-9L	15.88 (403)	15.43 (392)	9.84 (250)	7.32 (186)	10.28 (260)	42.90	19.50
VS1PF430-9	18.11 (460)	17.52 (445)	11.97 (304)	11.18 (284)	9.21 (234)	44.10	20.00
VS1PF430-9L	18.89 (480)	18.44 (468.5)	10.23 (260)	8.66 (220)	10.57 (268)	58.30	26.50
VS1PF440-9	18.11 (460)	17.52 (445)	11.97 (304)	11.18 (284)	9.21 (234)	44.10	20.00
VS1PF440-9L	18.89 (480)	18.44 (468.5)	10.23 (260)	8.66 (220)	10.57 (268)	58.30	26.50
VS1PF450-9	21.02 (534)	20.28 (515)	11.81 (300)	7.48 (190)	10.46 (266)	59.50	27.00
VS1PF450-9L	26.92 (684)	26.18 (665)	11.81 (300)	7.48 (190)	10.46 (266)	86	39
VS1PF460-9	21.02 (534)	20.28 (515)	11.81 (300)	7.48 (190)	10.46 (266)	59.50	27.00
VS1PF460-9L	26.92 (684)	26.18 (665)	11.81 (300)	7.48 (190)	10.46 (266)	88.2	40
VS1PF475-9	21.02 (534)	20.28 (515)	11.81 (300)	7.48 (190)	11.52 (293)	64.00	29.10
VS1PF475-9L	26.92 (68.4)	26.18 (665)	11.81 (300)	7.48 (190)	11.52 (293)	92.6	42
VS1PF4100-9	24.02 (610)	23.09 (586.5)	14.57 (370)	8.66 (220)	13.29 (338)	92.60	42.10
VS1PF4100-9L	29.92 (760)	28.99 (737)	14.57 (370)	8.66 (220)	13.29 (338)	147.4	67
VS1PF4125-9	24.02 (610)	23.09 (586.5)	14.57 (370)	8.66 (220)	13.29 (338)	92.60	42.10
VS1PF4125-9L	29.92 (760)	28.99 (737)	14.57 (370)	8.66 (220)	13.29 (338)	149.9	68
VS1PF4150-9L	30.26 (768.5)	29.29 (744)	20.08 (510)	15.00 (381)	16.64 (423)	222.70	101.20
VS1PF4200-9L	30.26 (768.5)	29.29 (744)	20.08 (510)	15.00 (381)	16.64 (423)	222.70	101.20
VS1PF4250-9L	30.26 (768.5)	29.29 (744)	20.08 (510)	15.00 (381)	16.64 (423)	251.30	114.20
VS1PF4300-9L	41.85 (1063)	40.49 (1028)	27.17 (690)	22.87 (581)	17.70 (450)	441.90	200.90
VS1PF4350-9L	41.85 (1063)	40.49 (1028)	27.17 (690)	22.87 (581)	17.70 (450)	441.90	200.90
VS1PF4400-9L	41.85 (1063)	40.49 (1028)	27.17 (690)	22.87 (581)	17.70 (450)	441.90	200.90
VS1PF4500-9	44.90 (1140.5)	43.70 (1110)	30.39 (772)	19.69 (500)	17.40 (442)	535.70	243.50
VS1PF4600-9	51.28 (1302.5)	50.06 (1271.5)	36.30 (922)	22.83 (580)	19.49 (495)	837.70	380.80
VS1PF4700-9	51.28 (1302.5)	50.06 (1271.5)	36.30 (922)	22.83 (580)	19.49 (495)	837.70	380.80

VS1PF 600V – Dimensions and Weights

Catalog Number	Dimensions In (mm)					Weight	
	A	A1	B	B1	C	lb	kg
VS1PF57-1	13.98 (355)	13.39 (340)	7.87 (200)	7.09 (180)	7.19 (182)	14.3	6.5
VS1PF510-1	13.98 (355)	13.39 (340)	7.87 (200)	7.09 (180)	7.19 (182)	15.4	7
VS1PF515-1	13.98 (355)	13.39 (340)	7.87 (200)	7.09 (180)	7.19 (182)		
VS1PF520-9	15.16 (385)	14.57 (370)	9.84 (250)	9.06 (230)	7.91 (201)	25.8	11.7
VS1PF525-9	15.16 (385)	14.57 (370)	9.84 (250)	9.06 (230)	7.91 (201)		
VS1PF530-9	18.11 (460)	17.52 (445)	11.97 (304)	11.18 (284)	9.21 (234)	41.7	18.9
VS1PF540-9	18.11 (460)	17.52 (445)	11.97 (304)	11.18 (284)	9.21 (234)		
VS1PF550-9	21.02 (534)	20.28 (515)	11.81 (300)	7.48 (190)	22.52 (293)	70.5	32
VS1PF560-9	21.02 (534)	20.28 (515)	11.81 (300)	7.48 (190)	22.52 (293)		
VS1PF575-9	21.02 (534)	20.28 (515)	11.81 (300)	7.48 (190)	22.52 (293)		
VS1PF5100-9	24.02 (610)	23.09 (587)	14.57 (370)	8.66 (220)	13.29 (338)	101.4	46
VS1PF5125-9	24.02 (610)	23.09 (587)	14.57 (370)	8.66 (220)	13.29 (338)		
VS1PF5150-9L	30.26 (769)	29.29 (744)	20.08 (510)	15 (381)	16.64 (423)	222.7	101

VS1PF – Dimension Diagram

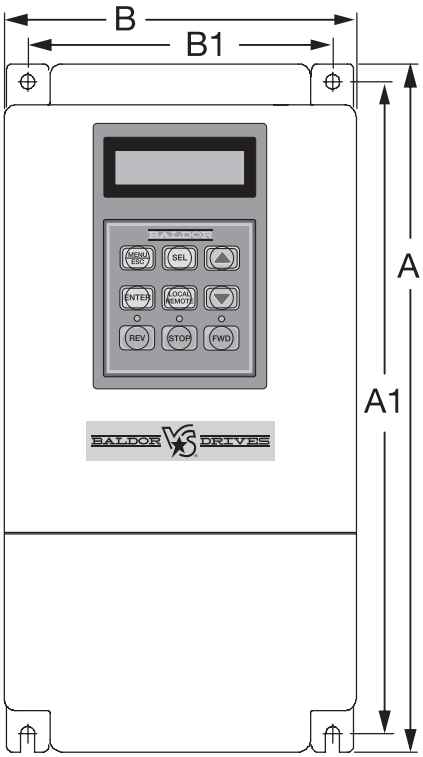

Frame A, B, C, E

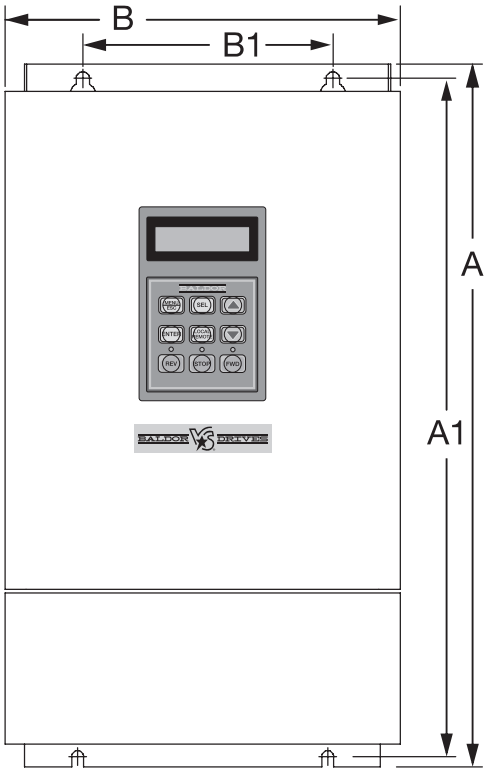

Frame D, F, G, H, J, K, L, M, N, P, R, S, T

BALDOR

VS1PF – 230V, 50/60 Hz, 3-Phase

	Catalog Number	Frame	Hp (Normal Duty)	Output Current	List Price	Mult. Sym.
◊	VS1PF27-1	A	7.5	24	1,277	EB
◊	VS1PF210-1	B	10	32	1,489	EB
◊	VS1PF215-1	B	15	46	1,649	EB
◊	VS1PF220-9	C	20	60	1,915	EB
◊	VS1PF225-9	C	25	74	2,447	EB
◊	VS1PF230-9	E	30	88	3,191	EB
◊	VS1PF240-9	E	40	115	3,723	EB

VS1PF – 460V, 50/60 Hz, 3-Phase

	Catalog Number	Frame	Hp (Normal Duty)	Output Current	List Price	Mult. Sym.
◊	VS1PF47-1	A	7.5	12	1,223	EB
◊	VS1PF410-1	B	10	16	1,489	EB
◊	VS1PF415-1	B	15	24	1,596	EB
◊	VS1PF420-9	C	20	30	1,979	EB
◊	VS1PF420-9L*	D	20	30	2,340	EB
◊	VS1PF425-9	C	25	39	2,340	EB
◊	VS1PF425-9L*	D	25	39	2,766	EB
◊	VS1PF430-9	E	30	45	3,085	EB
◊	VS1PF430-9L*	F	30	45	3,457	EB
◊	VS1PF440-9	E	40	61	3,723	EB
◊	VS1PF440-9L*	F	40	61	4,096	EB
◊	VS1PF450-9	G	50	75	4,468	EB
◊	VS1PF450-9L*	J	50	75	5,000	EB
◊	VS1PF460-9	G	60	91	5,745	EB
◊	VS1PF460-9L*	J	60	91	6,383	EB
◊	VS1PF475-9	H	75	110	6,915	EB
◊	VS1PF475-9L*	K	75	110	7,553	EB
◊	VS1PF4100-9	L	100	152	7,766	EB
◊	VS1PF4100-9L*	M	100	152	8,617	EB
◊	VS1PF4125-9	L	125	183	9,574	EB
◊	VS1PF4125-9L*	M	125	183	10,479	EB
◊	VS1PF4150-9L*	N	150	223	11,064	EB
◊	VS1PF4200-9L*	N	200	264	12,766	EB
◊	VS1PF4250-9L*	P	250	325	14,894	EB
◊	VS1PF4300-9L*	R	300	413	18,085	EB
◊	VS1PF4350-9L*	R	350	432	21,277	EB
◊	VS1PF4400-9L*	R	400	547	29,787	EB
◊	VS1PF4500-9	S	500	613	34,043	EB
◊	VS1PF4600-9	T	600	731	42,553	EB
◊	VS1PF4700-9	T	700	877	51,064	EB

◊ Stock Model Numbers

VS1PFS HiHp 230V Pump and Fan Drive

50 thru 75 Hp **230 VAC** **3 Phase - 50/60 Hz**

Standard Features

- Voltage Ratings:
  - 200 - 230VAC, 3 phase, 50 - 75 Hp
- Enclosure: IP00
- Inverter Type: PWM with IGBT
- 1-8 Hz Carrier Frequency
- 0-400 Hz Output Frequency
- Removable Keypad (Able to read and write parameters)
- Intelligent Accel/Decel for Trip-Free Operation
- Auto Tuning
- 8 Multi-Function Inputs
- 1 Multi-Function Output
- Failure Relay
- Built-in PID Control
- Preset Speeds
- Wire Operation
- Multi-Step Programmable Run Patterns
- Auto Torque Boost
- DC Injection Braking
- Stall Prevention
- Drive View Software Operation

Options:

- Communications Board:
  - RS-485
  - DeviceNet
  - ModBus-RTU
  - ProfiBus DP
  - Extended I/O Module
    - Sub-A Board:
      - 3 Multi-Function Input
      - 3 Multi-Function Output
    - Sub-B Board:
      - Encoder Plus Input
      - Encoder Plus Output
    - Sub-C Board:
      - 3 Multi-Function Input
      - 3 Multi-Function Output
      - Aux. Analog Reference Frequency (Isolated)
- Cable for Remote Keypad Operations
- Dynamic Braking Units
- Dynamic Braking Resistors

Application

- Traverse
- Draw
- MMC (Multi Motor Control)
- Converting
- Material Handling
- Web Processing
- Fan/Pump Controls
- Conveyors
- Industrial Washing Machine, etc.

Conformity to Global Standards

- UL and cUL for North America
- CE marked for Europe
- Quality Process Controlled by ISO9001, ISO14000

ISO9001 **ISO140000**

VS1PFS – 230V, 50/60 Hz, 3-Phase

	Catalog Number	Frame	Hp (Normal Duty)	Output Current	List Price	Mult. Sym.
◊	VS1PFS250-9	G	50	146	7,766	EB
◊	VS1PFS260-9	G	60	180	9,574	EB
◊	VS1PFS275-9	G	75	220	11,932	EB

◊ Stock Model Numbers

Instruction Manuals

VS1PFS Manual: MN768

VS1PFS – Dimensions and Weights – 230V, 50/60 Hz, 3-Phase

Catalog Number	Dimensions In (mm)					Weight	
	A	A1	B	B1	C	lb	kg
VS1PFS250-9	28.77 (730)	26.06 (662)	13.78 (350)	10.63 (270)	12.25 (311)	92.6	52
VS1PFS260-9	30.71 (780)	29.94 (760)	15.63 (397)	10.83 (275)	12.99 (330)	134.5	61
VS1PFS275-9	30.71 (780)	29.94 (760)	15.63 (397)	10.83 (275)	12.99 (330)	134.5	61

BALDOR

VS1PF – Accessories and Options

VS1PF NEMA 1 Kit

NEMA 1 kits are available for VS1PF drives from 20 Hp to 125 Hp.

Description		Catalog Number	List Price	Mult. Sym.
NEMA 1 Kit for 20Hp & 25Hp Without Built-In DC Link Inductor	◊	**VS1PF-NM1C**	58	EB
NEMA 1 Kit for 20Hp & 25Hp With Built-In DC Link Inductor	◊	**VS1PF-NM1D**	66	EB
NEMA 1 Kit for 30Hp & 40Hp Without Built-In DC Link Inductor	◊	**VS1PF-NM1E**	77	EB
NEMA 1 Kit for 30Hp & 40Hp With Built-In DC Link Inductor	◊	**VS1PF-NM1F**	85	EB
NEMA 1 Kit for 50Hp to 75Hp Without Built-In DC Link Inductor	◊	**VS1PF-NM1GH**	116	EB
NEMA 1 Kit for 50Hp to 75Hp With Built-In DC Link Inductor	◊	**VS1PF-NM1JK**	116	EB
NEMA 1 Kit for 100Hp & 125Hp Without Built-In DC Link Inductor	◊	**VS1PF-NM1L**	155	EB
NEMA 1 Kit for 100Hp & 125Hp With Built-In DC Link Inductor	◊	**VS1PF-NM1M**	155	EB

VS1PF NEMA 4X Keypad

A NEMA 4X Keypad is available for remote mounting. Use the cables listed in the VS1PF remote keypad cables table below for mounting the NEMA 4X keypad.

Description		Catalog Number	List Price	Mult. Sym.
VS1PF NEMA 4X Remote Keypad	◊	**VS1PF-RKEYN4**	200	EB

VS1PF Remote Keypad Extension Cable

The VS1PF Keypad can be removed and remote mounted to door of a host enclosure. To remote mount the VS1PF Keypad, an extension cable is needed.

Remote Keypad Cable Kits

Description		Catalog Number	List Price	Mult. Sym.
VS1PF Remote Keypad 2m cable	◊	**VS1PF-CBL2**	52	EB
VS1PF Remote Keypad 3m cable	◊	**VS1PF-CBL3**	66	EB
VS1PF Remote Keypad 5m cable	◊	**VS1PF-CBL5**	80	EB

VS1PF Remote Keypad Extender Kit

This kit allows a remote keypad to be located up to 4,000 feet from the PF device.

Description		Catalog Number	List Price	Mult. Sym.
VS1PF Remote Keypad Extender Kit	◊	**VS1PF-KPEXT**	995	EB

VS1PF Communication Options

Several Communication Option Boards are available & planned for the VS1PF.

Description		Catalog Number	List Price	Mult. Sym.
DeviceNet Option Board for VS1PF	◊	**VS1PF-DNET**	312	EB
MODBUS-RTU Option Board for VS1PF (Provides increased speed)	◊	**VS1PF-MBUS**	265	EB
Profibus Option Board for VS1PF	◊	**VS1PF-PBUS**	478	EB
MODBUS TCP/IP Option Board for VS1PF	◊	**VS1PF-MBTCP**	567	EB
LONWORKS Option Board for VS1PF	◊	**VS1PF-LON**	709	EB
BACNET TCP/IP Option Board for VS1PF	◊	**VS1PF-BAC**	709	EB
Metasys N2 Option Board for VS1PF	◊	**VS1PF-MET**	709	EB

◊ Stock Model Numbers

Dynamic Braking Units and Resistors

VS1PF Drives support Dynamic Braking via an External Dynamic Braking Unit (DBU) combined with separate Dynamic Braking Resistors. The below table recommends both the DBU and resistor for a given HP and voltage. IP 20 Enclosure. The DBU and resistors must be mounted separate from the VS1PF drive. See the Manual MN763DB for additional details.

VS1PF Dynamic Braking Units and Resistors

Input Volts	Hp	Dynamic Braking Unit Selection					Recommended Dynamic Braking Resistors				
		Dynamic Braking Unit Catalog Number	List Price (Each)	Discount Symbol	Minimum Allowable Ohms	Maximum Continuous Braking Wattage	Resistor Catalog Number	List Price (Each)	Discount Symbol	Ohms	Wattage
230	7.5	◊ **VS1PF-T220**	596	EB	8.5	3,200	◊ **VS1-R20W800**	298	EB	20	800
	10	◊ **VS1PF-T220**	596	EB	8.5	3,200	◊ **VS1-R15W1200**	360	EB	15	1,200
	15	◊ **VS1PF-T220**	596	EB	8.5	3,200	◊ **VS1-R10W2400**	476	EB	10	2,400
	20	◊ **VS1PF-T220**	596	EB	8.5	3,200	◊ **VS1-R10W2400**	476	EB	10	2,400
	25	◊ **VS1PF-T230**	667	EB	5.7	4,800	◊ **VS1-R8W2400**	476	EB	8	2,400
	30	◊ **VS1PF-T230**	667	EB	5.7	4,800	◊ **VS1-R8W2400**	476	EB	8	2,400
	40	◊ **VS1PF-T250**	1,314	EB	4.2	6,400	◊ **VS1-R5W3600**	859	EB	5	3,600
	50	◊ **VS1PF-T250**	1,314	EB	4.2	6,400	◊ **VS1-R5W3600**	859	EB	5	3,600
	60	◊ **VS1PF-T275**	1,504	EB	2.8	9,600	◊ ***VS1-R8W2400**	476	EB	4	4,800
	75	◊ **VS1PF-T275**	1,504	EB	2.8	9,600	◊ ***VS1-R8W2400**	476	EB	4	4,800
460	7.5	◊ **VS1PF-T420**	596	EB	33.9	3,200	◊ **VS1-R85W1000**	337	EB	85	1,000
	10	◊ **VS1PF-T420**	596	EB	33.9	3,200	◊ **VS1-R60W1200**	360	EB	60	1,200
	15	◊ **VS1PF-T420**	596	EB	33.9	3,200	◊ **VS1-R40W2000**	453	EB	40	2,000
	20	◊ **VS1PF-T420**	596	EB	33.9	3,200	◊ **VS1-R40W2000**	453	EB	40	2,000
	25	◊ **VS1PF-T430**	667	EB	22.8	4,800	◊ **VS1-R30W2400**	476	EB	30	2,400
	30	◊ **VS1PF-T430**	667	EB	22.8	4,800	◊ **VS1-R30W2400**	476	EB	30	2,400
	40	◊ **VS1PF-T450**	1,314	EB	16.9	6,400	◊ **VS1-R20W3600**	859	EB	20	3,600
	50	◊ **VS1PF-T450**	1,314	EB	16.9	6,400	◊ **VS1-R20W3600**	859	EB	20	3,600
	60	◊ **VS1PF-T475**	1,504	EB	11.4	9,600	◊ ***VS1-R30W2400**	476	EB	15	4,800
	75	◊ **VS1PF-T475**	1,504	EB	11.4	9,600	◊ ***VS1-R30W2400**	476	EB	15	4,800
	100	◊ **VS1PF-T4100**	1,551	EB	8.4	12,800	◊ ***VS1-R20W3600**	859	EB	10	7,200

* Use two resistors in parallel to provide the recommended ohms and wattage.

◊ Stock Model Numbers

BALDOR

VS1PF mA Output Board

This kit allows the ability for the VS1PF to provide a 0-20mA output signal.

Description		Catalog Number	List Price	Mult. Sym.
VS1PF mA Output Board	◊	**VS1PF-MAOUT**	200	EB

VS1 USB to RS485 Converter Kit

This kit allows communications between a USB port on a computer and the VS1PF Drive RS485 control terminals.

Description		Catalog Number	List Price	Mult. Sym.
VS1 USB to RS485 Converter Kit	◊	**VS1-COMMUSB**	500	EA

◊ Stock Model Numbers

DriveView Software

DriveView communications software for Baldor VS1PF Drives is available at no charge by downloading from the Baldor VS Drives web site at www.baldor.com.

EMC Filter

EMC CE compliance for both conducted and radiated noise emissions can be met by the use of the following AC power line filters. Their use provides compliance to EN 50081-2 (A Class) and EN61000-6-4:02.

EMC Footprint Filters for PF Drive

VS1PF M/N	Hp	Filter M/N	List Price	Mult. Sym.
VS1PF27-1	7.5	**VS1PF-FFLT230**	344	E8
VS1PF210-1	10	**VS1PF-FFLT250**	416	E8
VS1PF47-1	7.5	**VS1PF-FFLT420**	324	E8
VS1PF410-1	10	**VS1PF-FFLT430**	344	E8
VS1PF415-1	15	**VS1PF-FFLT450**	416	E8
VS1PF420-9	20	**VS1PF-FFLT460**	480	E8
VS1PF420-9L	20	**VS1PF-FFLT460**	480	E8
VS1PF425-9	25	**VS1PF-FFLT460**	480	E8
VS1PF425-9L	25	**VS1PF-FFLT460**	480	E8
VS1PF430-9	30	**VS1PF-FFLT470**	586	E8
VS1PF430-9L	30	**VS1PF-FFLT470**	585	E8

EMC Standard Filters for PF Drive

VS1PF M/N	Hp	Filter M/N	List Price	Mult. Sym.
VS1PF27-1	7.5	VS1PF-SFLT230	370	E8
VS1PF210-1	10	VS1PF-SFLT250	487	E8
VS1PF215-1	15	VS1PF-SFLT270	610	E8
VS1PF220-9	20	VS1PF-SFLT2100	833	E8
VS1PF225-9	25	VS1PF-SFLT2100	833	E8
VS1PF230-9	30	VS1PF-SFLT2120	995	E8
VS1PF240-9	40	VS1PF-SFLT2150	1060	E8
VS1PF47-1	7.5	VS1PF-SFLT420	340	E8
VS1PF410-1	10	VS1PF-SFLT430	370	E8
VS1PF415-1	15	VS1PF-SFLT430	370	E8
VS1PF420-9	20	VS1PF-SFLT450	487	E8
VS1PF420-9L	20	VS1PF-SFLT450	487	E8
VS1PF425-9	25	VS1PF-SFLT460	572	E8
VS1PF425-9L	25	VS1PF-SFLT460	572	E8
VS1PF430-9	30	VS1PF-SFLT470	610	E8
VS1PF430-9L	30	VS1PF-SFLT470	610	E8
VS1PF440-9	40	VS1PF-SFLT470	610	E8
VS1PF440-9L	40	VS1PF-SFLT470	610	E8
VS1PF450-9	50	VS1PF-SFLT4100	833	E8
VS1PF450-9L	50	VS1PF-SFLT4100	833	E8
VS1PF460-9	60	VS1PF-SFLT4120	995	E8
VS1PF460-9L	60	VS1PF-SFLT4120	995	E8
VS1PF475-9	75	VS1PF-SFLT4120	995	E8
VS1PF479-9L	75	VS1PF-SFLT4120	995	E8
VS1PF4100-9	100	VS1PF-SFLT4180	1108	E8
VS1PF4100-9L	100	VS1PF-SFLT4180	1108	E8
VS1PF4125-9	125	VS1PF-SFLT4250	1782	E8
VS1PF4125-9L	125	VS1PF-SFLT4250	1782	E8
VS1PF4150-9L	150	VS1PF-SFLT4250	1782	E8
VS1PF4200-9L	200	VS1PF-SFLT4320	2022	E8
VS1PF4250-9L	250	VS1PF-SFLT4400	2135	E8
VS1PF4300-9L	300	VS1PF-SFLT4600	2963	E8
VS1PF4350-9L	350	VS1PF-SFLT4600	2963	E8
VS1PF4400-9L	400	VS1PF-SFLT4600	2963	E8
VS1PF4500-9	500	VS1PF-SFLT41000	4654	E8
VS1PF4600-9	600	VS1PF-SFLT41000	4654	E8
VS1PF4700-9	700	VS1PF-SFLT41000	4654	E8

Pressure-to-Electrical Transducer Kit

This kit converts a psig pressure sensor valve into an electrical signal which the PF drive can follow. Contact factory for specific input and output ratings available for ordering purposes.

Description	Catalog Number	List Price	Mult. Sym.
PET Transducer Kit	EM0002A01	1545	P1

BALDOR

Recommended AC Line and Load Reactors for VS1PF Drive

PF Model Number	Hp	AC Reactor Catalog Number	List Price	Mult. Sym.
VS1PF27-1	7.5	LRAC03501	631	E8
VS1PF210-1	10	LRAC04501	665	E8
VS1PF215-1	15	LRAC05501	706	E8
VS1PF220-9	20	LRAC080BTB	824	E8
VS1PF225-9	25	LRAC110BCB	1,069	E8
VS1PF230-9	30	LRAC110BCB	1,069	E8
VS1PF240-9	40	LRAC160BCB	1,667	E8
VS1PF47-1	7.5	LRAC01802	522	E8
VS1PF410-1	10	LRAC02502	823	E8
VS1PF415-1	15	LRAC03502	875	E8
VS1PF420-9	20	LRAC04502	704	E8
VS1PF420-9L	20	LRAC04502	704	E8
VS1PF425-9	25	LRAC05502	980	E8
VS1PF425-9L	25	LRAC05502	980	E8
VS1PF430-9	30	LRAC05502	980	E8
VS1PF430-9L	30	LRAC05502	980	E8
VS1PF440-9	40	LRAC08002	869	E8
VS1PF440-9L	40	LRAC08002	869	E8
VS1PF450-9	50	LRAC110ACB2	1130	E8
VS1PF450-9L	50	LRAC110ACB2	1130	E8
VS1PF460-9	60	LRAC110ACB2	1130	E8
VS1PF460-9L	60	LRAC110ACB2	1130	E8
VS1PF475-9	75	LRAC160ACB2	1759	E8
VS1PF479-9L	75	LRAC160ACB2	1759	E8
VS1PF4100-9	100	LRAC200ACB	2059	E8
VS1PF4100-9L	100	LRAC200ACB	2059	E8
VS1PF4125-9	125	LRAC360ACB2	2881	E8
VS1PF4125-9L	125	LRAC360ACB2	2881	E8
VS1PF4150-9L	150	LRAC420ACB2	3069	E8
VS1PF4200-9L	200	LRAC420ACB2	3069	E8
VS1PF4250-9L	250	LRAC420ACB2	3069	E8
VS1PF4300-9L	300	LRAC600ACB	5649	E8
VS1PF4350-9L	350	LRAC600ACB	5649	E8
VS1PF4400-9L	400	Contact Baldor	—	—
VS1PF4500-9	500	Contact Baldor	—	—
VS1PF4600-9	600	Contact Baldor	—	—
VS1PF4700-9	700	Contact Baldor	—	—

VS1PFB
Bypass Panels

Baldor introduces its newest line of pump and fan drive packages utilizing our popular VS1PF series of controls. With industry standard features of Hand-Off-Auto (HOA) and Local/Remote Bypass features, the package suits most popular specifications. However, Baldor didn't stop there, utilizing an Electronic Bypass, it can switch to Bypass when a Critical Fault occurs on the Drive. A remote "run" command can easily be accommodated as well, allowing your system to send down the command, instead of needing someone to physically turn the switch. No matter what, the motor will continue to operate even in the event of a drive loss.

The VS1PF line of controls offers both V/Hz and Encoderless Vector mode for your Variable Torque (VT) application. Energy Savings mode can reduce KW used by the control when operated on VT loads. The slimline design allows for side-by-side mounting with near zero clearance. All pre-wired with knock-outs provide quick connections to line, load, and analog/digital inputs.

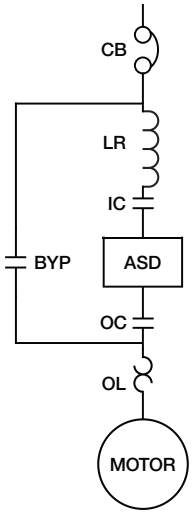

These VS1PF packaged systems contain:

- NEMA 1 Type enclosure
- Circuit Breaker with lockable Disconnect
- Line Reactor rated at 3%
- Surge Suppression
- VS1PF control
- Thermostat input
- Class 10 Motor Overload
- Hand-Off-Auto selector switch
- ASD-Test-Bypass
- Manual Potentiometer for Hand mode
- Analog input, voltage or current, for Auto mode
- Power on, Fault, ASD, Bypass indicating light.
- Options: Fused Drive Input, Load Reactor, Communications Boards

PID Control
In centrifugal pump and fan applications, PID control is provided as a standard function, helping maintain a constant process control of pressure, flow, and oil level. This function includes pre-PID, sleep/wake up, and output inverse sub-functions.

External PID
This function can be used to regulate an unrelated external process, such as a temperature loop, as well as provide cascaded control to the internal PID. It can also be used to control the motor speed directly.

Internal PID
Not only does this regulate process variables, but the drive's internal PID control function can also receive references from an analog input, keypad, or communications port. In addition, it can receive process feedback via an analog or pulse input.

Flying Start
With the flying start function, the drive senses the motor's rotation prior to producing torque. This allows the drive output to be synchronized with the rotating motor during startup. It is particularly useful when back-pressure causes a pump to spin backward or when an updraft causes the fan to rotate (when the drive is disabled).

Sleep/Wake
The sleep/wake function disables/re-enables the drive automatically as demand dictates. This helps eliminate unnecessary operation at idle speeds, thus saving wear and tear, as well as energy. out-of-the-box operation make it among the most popular variable speed motor controls. It is ideal for applications where multiple motors are operated simultaneously from one motor control.

Sensorless Vector Control
The VS1PF can also function in a sensorless vector mode for constant torque pumps such as progressive cavity pumps.

Pre-Heat
This allows the drive to maintain residual heat in the motor, which helps eliminate condensation in damp conditions when the motor is not in use. In the drive, an adjustable, low-level DC current is applied to the stator windings either continuously or on a duty cycle basis.

Significant Energy Savings
With its energy-saving features, the VS1PF drive provides significant savings over damper control. Its automatic mode adjusts output automatically based on load for optimum savings, and its manual mode lets you set the amount of savings manually.

BALDOR

VS1PFB Bypass Panels

Integrated Bypass Module

Operator Station:

- Speed – Speed pot for operating in Hand mode
- Hand – Speed is controlled by speed pot
- Off – Motor is off
- Auto – Accepts signal from process
- ASD – Drive is on and operational
- Bypass – Motor is operated "across the line." Drive is off
- Test mode allows the control to be programmed while in Bypass mode.

Indicating lights:

- Amber Power Light
- ASD – On when ASD is controlling motor
- Bypass – On when in normal bypass, Slow blinking when commanded from Remote source or from drive
- Fault – On when ASD is faulted, Slow blinking where critical fault occurs

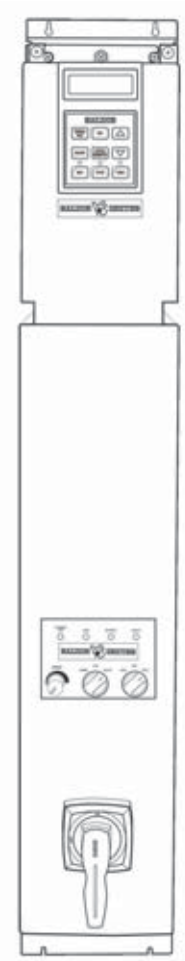

Hp	Packaged Drive Catalog Number	Output Amps	Frame
230V Controls			
7.5	**VS1PFB27-1**	24	B2
10	**VS1PFB210-1**	32	B2
15	**VS1PFB215-1**	46	B2
20	**VS1PFB220-1**	60	C2
25	**VS1PFB225-1**	74	C2
30	**VS1PFB230-1**	88	E2
40	**VS1PFB240-1**	115	E2
460V Controls			
7.5	**VS1PFB47-1**	12	B4
10	**VS1PFB410-1**	18	B4
15	**VS1PFB415-1**	24	B4
20	**VS1PFB420-1**	30	C4
25	**VS1PFB425-1**	39	C4
30	**VS1PFB430-1**	45	E4
40	**VS1PFB440-1**	61	E4
50	**VS1PFB450-1**	75	G4
60	**VS1PFB460-1**	91	G4
75	**VS1PFB475-1**	110	H4
100	**VS1PFB4100-1**	152	L4
125	**VS1PFB125-1**	183	L4

Dimensions in (mm)				Approx. Weight Lbs
Frame	Height in (mm)	Width in (mm)	Depth in (mm)	
B2	52(1319)	8.6(218)	10.3 (261)	35
C2	60(1522)	10.5(266)	10.7 (271)	65
E2	62(1573)	12.6(320)	11.9 (302)	85
B4	42(1066)	8.6(218)	10.3 (261)	35
C4	48(1218)	10.5(266)	10.7 (271)	65
E4	54(1370)	12.6(320)	11.9 (302)	85
G4	57(1446)	12.3(312)	13.8 (350)	100
H4	65(1649)	12.3(312)	14.8 (375)	125
L4	62(1573)	36(913)	18.2 (462)	150

Contact your local District Office for Larger HP versions up to 700 Hp

Optional Communications Expansion Boards	
Type	**Catalog Number**
DeviceNet	**VS1PF-DNET**
ModBus-RTU	**VS1PF-MBUS**
Profibus	**VS1PF-PBUS**
MetasysN2	**VS1PF-MET V2**
Modbus TCP/IP	**VS1PF-MBTCP**
LonWorks	**VS1PF-LON**
BacNet	**VS1PF-BAC**

Supporting Literature

VS1PF Manual: MN763
VS1PFB Manual: MN763BP
VS1PF Data Sheet: FL763
VS1PFB Brochure: FL768

Service Conditions

Altitude: 1,000 m (3,300 ft) Maximum
Ambient Temperature: -10ºC (14ºF) to 40ºC (104ºF)
Storage Temperature: -20ºC (-2ºF) to 65ºC (149ºF)
Relative Humidity: 0% to 95%, non-condensing
Intermittent Overload: 110% overload capacity for up to 1 minute

VS1PFB27 - 1X

- **VS1 Family**
- **Pump/Fan Controls**
- **Bypass**
- **Voltage**: 2-230, 4-460
- **OPTIONS**: R = Load reactor; P = Fuse protection
- **NEMA 1**
- **HP**

VS1PFB Bypass Panels

HVAC

	Packaged Drive	List Price	With Drive Fuses	List Price	With Load Reactor	List Price	Mult. Sym.
◊	**VS1PFB27-1**	3,899	**VS1PFB27-1P**	4,099	**VS1PFB27-1R**	4,397	E1
◊	**VS1PFB210-1**	4,086	**VS1PFB210-1P**	4,336	**VS1PFB210-1R**	4,614	E1
◊	**VS1PFB215-1**	5,207	**VS1PFB215-1P**	5,507	**VS1PFB215-1R**	5,764	E1
◊	**VS1PFB220-1**	5,933	**VS1PFB220-1P**	6,258	**VS1PFB220-1R**	6,524	E1
◊	**VS1PFB225-1**	6.928	**VS1PFB225-1P**	7,428	**VS1PFB225-1R**	7,618	E1
◊	**VS1PFB230-1**	8,008	**VS1PFB230-1P**	8,558	**VS1PFB230-1R**	8,903	E1
◊	**VS1PFB240-1**	10,259	**VS1PFB240-1P**	10,859	**VS1PFB240-1R**	11,460	E1
◊	**VS1PFB47-1**	3,928	**VS1PFB47-1P**	4,128	**VS1PFB47-1R**	4,346	E1
◊	**VS1PFB410-1**	3,975	**VS1PFB410-1P**	4,225	**VS1PFB410-1R**	4,412	E1
◊	**VS1PFB415-1**	4,753	**VS1PFB415-1P**	5,053	**VS1PFB415-1R**	5,277	E1
◊	**VS1PFB420-1**	5,709	**VS1PFB420-1P**	6,034	**VS1PFB420-1R**	6,265	E1
◊	**VS1PFB425-1**	6,522	**VS1PFB425-1P**	6,872	**VS1PFB425-1R**	7,078	E1
◊	**VS1PFB430-1**	7,529	**VS1PFB430-1P**	7,904	**VS1PFB430-1R**	8,118	E1
◊	**VS1PFB440-1**	9,542	**VS1PFB440-1P**	9,942	**VS1PFB440-1R**	10,163	E1
◊	**VS1PFB450-1**	11,024	**VS1PFB450-1P**	11,434	**VS1PFB450-1R**	11,752	E1
◊	**VS1PFB460-1**	12,060	**VS1PFB460-1P**	12,485	**VS1PFB460-1R**	13,006	E1
◊	**VS1PFB475-1**	14,613	**VS1PFB475-1P**	15,163	**VS1PFB475-1R**	15,878	E1
◊	**VS1PFB4100-1**	19,212	**VS1PFB4100-1P**	19,797	**VS1PFB4100-1R**	20,477	E1
◊	**VS1PFB4125-1**	20,417	**VS1PFB4125-1P**	21,027	**VS1PFB4125-1R**	21,890	E1

Notes: Larger sizes up to 700 Hp available. Contact Baldor.

VS1SP and VS1GV controls may be substituted in standard Hoffman style enclosure. See the following Packaged Drives pages.

◊ Stock Model Numbers

BALDOR

VS1PF Packaged Drives

Packaged Baldor V*S Drives provide custom solutions for customer applications. Packaged Baldor V*S Drives are available for VS1PF drives from 7.5 to 700HP. Standard packaged options are shown in this catalog including NEMA 1, 12, 4, 4X & 3R enclosures, Input fusing & circuit breakers, door mounted operators, input/output contactors, bypass, line/load reactors, control transformers, dynamic braking as well as many other peripheral equipment options. If you don't see the option you need, please contact the factory via your Local Baldor District Sales Office, and we will custom engineer it for you.

VS1PF Packaged Drives

VS1PF 230 VAC Base Drive Model Number							
Inverter	**VS1PF 27-1**	**VS1PF 210-1**	**VS1PF 215-1**	**VS1PF 220-9**	**VS1PF 225-9**	**VS1PF 230-9**	**VS1PF 240-9**
Base Drive List	1,277	1,489	1,649	1,915	2,447	3,191	3,723
HP Rating (Variable Torque)	7.5	10	15	20	25	30	40
FLA (Normal Duty)	24	32	46	60	74	88	115
Enclosure Options							
NEMA 1 Cabinet Ventilated	1147	1440	1440	1440	1678	1678	1678
NEMA 12 Cabinet Ventilated	1193	1492	1492	1492	1743	1743	1743
NEMA 12 Cabinet with A/C	2457	3096	3096	3096	3744	3744	3744
NEMA 4 Cabinet with A/C	3690	3888	3888	3888	4536	4536	4536
NEMA 4X Cabinet with A/C	3978	4779	4779	4779	6156	6156	6156
NEMA 3R Rainproof	1519	1777	1777	1777	1890	1890	1890
Input Protection & Disconnect Options							
Input Fuses Only	158	178	178	245	317	317	611
Fused Disconnect Switch & Rotary Handle	403	438	438	505	757	757	1,208
Circuit Breaker Only	752	865	865	865	865	865	911
Circuit Breaker Disconnect & Rotary Handle	1018	1131	1131	1131	1131	1131	1177
Door Mounted Operator Devices							
Door Mounted OIM (Remote Keypad)	75	75	75	75	75	75	75
Maintained Start/Stop Switch	105	105	105	105	105	105	105
Momentary Start/Stop Push Buttons	180	180	180	180	180	180	180
E-Stop Push Button (Mushroom Head)	120	120	120	120	120	120	120
Jog Push Button	90	90	90	90	90	90	90
2 or 3 Position Selection Switch	90	90	90	90	90	90	90
Pilot Light(1)	85	85	85	85	85	85	85
Manual Potentiometer	120	120	120	120	120	120	120
Contactors, Overloads, Starters, Control Transformers & Line Reactors							
Input Contactor(1)	220	450	450	450	450	800	800
Output Contactor(1)	220	450	450	450	450	800	800
Drive Bypass Control(1)	1160	1850	1850	1850	1850	2900	2900
Motor Overload Relay	200	200	250	250	250	310	310
Blower Motor Starter(1,4)	180	180	180	180	180	180	180
Control Transformer: 460:120 VAC, 250VA (2)	275	275	275	275	275	275	275
3% Impedance Input Line or Load Reactor	498	528	557	591	690	895	1201
Other peripheral equipment							
Space Heater (100W)	120	120	120	120	120	120	120
Analog Input or output Isolator	980	980	980	980	980	980	980
Shunt Trip device	280	280	280	280	280	280	280
Undervoltage Release Device	355	355	355	355	355	355	355
RFI/EMI filter	590	810	810	980	980	980	1170
DC Power Supply	210	210	210	210	210	210	210
MOV surge protection	100	100	100	100	100	100	100
Input IEEE 519-1992 Harmonic Filter	5210	6270	7210	7700	7920	9910	9940
Dynamic Braking - Transistor + Resistor							
1200W resistors	849	849	849	849	849	849	849
2400W resistors	1299	1299	1299	1299	1299	1299	1299
4800W resistors	2107	2107	2107	2107	2107	2107	2107

(1) Requires Control Transformer option
(2) Add $100 for each 100VA over 250VA
(3) Add $100 for each 100W over the first 100W
(4) Required on TEBC motors

BALDOR

VS1PF Packaged Drives

VS1PF 460 VAC Base Drive Model Number											
Inverter	**VS1PF 47-1**	**VS1PF 410-1**	**VS1PF 415-1**	**VS1PF 420-9**	**VS1PF 425-9**	**VS1PF 430-9**	**VS1PF 440-9**	**VS1PF 450-9**	**VS1PF 460-9**	**VS1PF 475-9**	**VS1PF 4100-9**
Base Drive List	1,223	1,489	1,596	1,979	2,340	3,085	3,723	4,468	5,745	6,915	7,766
HP Rating (Variable Torque)	7.5	10	15	20	25	30	40	50	60	75	100
FLA (Normal Duty)	12	16	24	30	39	45	61	75	91	110	152
Enclosure Options											
NEMA 1 Cabinet Ventilated	1147	1147	1147	1147	1678	1678	1678	1678	1755	1755	2083
NEMA 12 Cabinet Ventilated	1193	1193	1492	1492	1743	1743	1743	1743	2164	2164	2480
NEMA 12 Cabinet with A/C	2457	2457	3096	3096	3744	3744	3744	3744	4392	4392	4968
NEMA 4 Cabinet with A/C	3690	3690	3888	3888	4536	4536	4536	4536	5508	5508	6318
NEMA 4X Cabinet with A/C	3978	3978	4779	4779	6156	6156	6156	6156	7209	7209	7938
NEMA 3R Rainproof	1519	1519	1777	1777	1890	1890	1890	1890	2902	2902	3881
Input Protection & Disconnect Options											
Input Fuses Only	158	178	178	245	285	285	285	300	300	550	550
Fused Disconnect Switch & Rotary Handle	403	438	438	505	757	757	1,208	1208	1440	1440	1,440
Circuit Breaker Only	752	865	865	865	865	865	911	911	1100	1100	1100
Circuit Breaker Disconnect & Rotary Handle	1018	1131	1131	1131	1131	1131	1177	1177	1360	1360	1360
Door Mounted Operator Devices											
Door Mounted OIM (Remote Keypad)	75	75	75	75	75	75	75	75	75	75	75
Maintained Start/Stop Switch	105	105	105	105	105	105	105	105	105	105	105
Momentary Start/Stop Push Buttons	180	180	180	180	180	180	180	180	180	180	180
E-Stop Push Button (Mushroom Head)	120	120	120	120	120	120	120	120	120	120	120
Jog Push Button	90	90	90	90	90	90	90	90	90	90	90
2 or 3 Position Selection Switch	90	90	90	90	90	90	90	90	90	90	90
Pilot Light(1)	85	85	85	85	85	85	85	85	85	85	85
Manual Potentiometer	120	120	120	120	120	120	120	120	120	120	120
Contactors, Overloads, Starters, Control Transformers & Line Reactors											
Input Contactor(1)	220	220	220	460	460	460	460	450	450	800	800
Output Contactor(1)	220	220	220	460	460	460	460	450	450	800	800
Drive Bypass Control(1)	1160	1160	1160	1880	1880	1880	1880	1400	1400	2100	2100
Motor Overload Relay	200	200	250	250	250	310	310	310	310	420	420
Blower Motor Starter(1,4)	180	180	180	180	180	180	180	180	220	220	220
Control Transformer: 460:120 VAC, 250VA (2)	275	275	275	275	275	275	275	275	275	275	275
3% Impedance Input Line or Load Reactor	362	499	522	823	875	875	704	980	869	869	1130
Other peripheral equipment											
Space Heater (100W)	120	120	120	120	120	120	120	120	120	120	120
Analog Input or output Isolator	980	980	980	980	980	980	980	980	980	980	980
Shunt Trip device	280	280	280	280	280	280	280	280	280	280	280
Undervoltage Release Device	355	355	355	355	355	355	355	355	355	355	355
RFI/EMI filter	590	810	810	980	980	980	1170	1170	1170	1170	4590
DC Power Supply	210	210	210	210	210	210	210	210	210	210	210
MOV surge protection	100	100	100	100	100	100	100	100	100	100	100
Input IEEE 519-1992 Harmonic Filter	3160	3260	5210	6270	7210	7210	7700	7700	7920	9910	9940
Dynamic Braking - Transistor + Resistor											
1200W resistors	849	849	849	849	849	849	849	849	849	849	849
2400W resistors	1299	1299	1299	1299	1299	1299	1299	1299	1299	1299	1299
4800W resistors	2107	2107	2107	2107	2107	2107	2107	2107	2107	2107	2107

(1) Requires Control Transformer option
(2) Add $100 for each 100VA over 250VA
(3) Add $100 for each 100W over the first 100W
(4) Required on TEBC motors

VS1PF Packaged Drives

VS1PF 480 VAC Base Drive Model Number										
Inverter	**VS1PF 4125-9**	**VS1PF 4150-9L**	**VS1PF 4200-9L**	**VS1PF 4250-9L**	**VS1PF 4300-9L**	**VS1PF 4350-9L**	**VS1PF 4400-9L**	**VS1PF 4500-9**	**VS1PF 4600-9**	**VS1PF 4700-9**
Base Drive List	9,574	11,064	12,766	14,894	18,085	21277	29787	34043	42553	51064
HP Rating (Variable Torque)	125	150	200	250	300	350	400	500	600	700
FLA (Normal Duty)	183	223	264	325	413	432	547	613	731	877
Enclosure Options										
NEMA 1 Cabinet Ventilated	2315	2315	2625	2625	3856	3856	4280	4280	4280	4280
NEMA 12 Cabinet Ventilated	2756	2756	3224	3224	3224					
NEMA 12 Cabinet with A/C	5520	5520	6560	6560	6560					
NEMA 4 Cabinet with A/C	7020	7020	8640	8640	8640					
NEMA 4X Cabinet with A/C	8820	8820	10080	10080	1080					
NEMA 3R Rainproof	4313	4313	5725	5725	5725					
Input Protection & Disconnect Options										
Input Fuses Only	550	550	550	900	900					
Fused Disconnect Switch & Rotary Handle	1440	1440	1440	1810	1810					
Circuit Breaker Only	1400	1400	1400	1725	1725	3135	7420	7420	9280	12210
Circuit Breaker Disconnect & Rotary Handle	1625	1625	1625	1970	1970	3485	7770	7770	9630	12560
Door Mounted Operator Devices										
Door Mounted OIM (Remote Keypad)	75	75	75	75	75					
Maintained Start/Stop Switch	105	105	105	105	105					
Momentary Start/Stop Push Buttons	180	180	180	180	180					
E-Stop Push Button (Mushroom Head)	120	120	120	120	120					
Jog Push Button	90	90	90	90	90					
2 or 3 Position Selection Switch	90	90	90	90	90					
Pilot Light(1)	85	85	85	85	85					
Manual Potentiometer	120	120	120	120	120					
Contactors, Overloads, Starters, Control Transformers & Line Reactors										
Input Contactor(1)	1050	1050	1050	2500	2500					
Output Contactor(1)	1050	1050	1050	2500	2500					
Drive Bypass Control(1)	2600	2600	2600	5500	5500	18750	20690	25050	28485	32085
Motor Overload Relay	420	550	550	550	550					
Blower Motor Starter(1,4)	220	220	220	220	220					
Control Transformer: 460:120 VAC, 250VA (2)	275	275	275	275	275					
3% Impedance Input Line or Load Reactor	362	499	522	823	875					
Other peripheral equipment										
Space Heater (100W)	120	120	120	120	120					
Analog Input or output Isolator	980	980	980	980	980					
Shunt Trip device	280	280	280	280	280					
Undervoltage Release Device	355	355	355	355	355					
RFI/EMI filter										
DC Power Supply	210	210	210	210	210					
MOV surge protection	100	100	100	100	100					
Input IEEE 519-1992 Harmonic Filter										
Dynamic Braking - Transistor + Resistor										
1200W resistors	849	849	849	849	849					
2400W resistors	1299	1299	1299	1299	1299					
4800W resistors	2107	2107	2107	2107	2107					

(1) Requires Control Transformer option
(2) Add $100 for each 100VA over 250VA
(3) Add $100 for each 100W over the first 100W
(4) Required on TEBC motors

The bypass option includes:
- bypass contactor - reduced voltage starter (digital soft start) - additional bay (for bypass contactor, digital soft start, and wiring)

BALDOR

VS1PF Packaged Drives

Integrated Bypass Module

Packaged Pump and Fan Drives other than those listed on the previous pages, are available through the Baldor Fort Smith Drives Center. Common options are listed and priced on the following pages. Other options not listed are also available. Contact your Baldor District Sales Office for availability, pricing and delivery of other options.

Pricing a non-standard Pump and Fan Drive

Step 1: Determine the voltage, Hp, and FLA requirements.

Step 2: Determine the type of enclosure needed.

Step 3: Determine all drive options and equipment needed.

Step 4: Enter drive specification items on worksheet.

Step 5: Select correct item list pricing from the pricing sheets for all items and total.
Apply the correct discount multiplier to the total list price to determine net price of the drive.

Step 6: Submit your completed drive quote to your local Baldor District Sales Office to confirm delivery.

Pricing Worksheet Form

Parts / Options			
Description	**List**	**Quantity**	**Extended**
		List Total	
		Multiplier	
		Net	

VS1SP Inverter/Encoderless Vector Drive

1 thru 3 Hp	**115/230 VAC**	**1 Phase - 50/60 Hz**
1 thru 60 Hp	**230 VAC**	**3 Phase - 50/60 Hz**
1 thru 500 Hp	**460 VAC**	**3 Phase - 50/60 Hz**
1 thru 300 Hp	**600 VAC**	**3 Phase - 50/60 Hz**

Applications: Constant torque, variable torque or constant horsepower applications. New installations, replacements and original equipment manufacturers (OEM).

Features: NEMA 1 and NEMA 4 enclosure. Output frequency 0 to 500 Hz with peak overload capacity of 175%. Separate accel/decel rates and controlled reversing. Built-in two and three input PID process control loop.

Input Ratings	Voltage	115	230	230	460	600
	Voltage Range	95-130	180-264	180-264	340-528	515-660
	Phase	Single Phase		Three Phase (single phase with derating)		
	Frequency	50/60Hz ± 5%				
	Impedance	1% minimum from mains connection (3% for AA Frame drives)				
Output Ratings	Horsepower	1-3 Hp @ 115/230VAC, 1PH; 1-60 Hp @ 230VAC, 3PH; 1-500 Hp @ 460VAC, 3PH; 1-300 Hp @ 600VAC, 3PH				
	Overload Capacity	Heavy Duty (Constant Torque) = 150% for 60 seconds, 175% for 3 seconds				
		Normal Duty (Variable Torque) = 115% for 60 seconds				
	Frequency	0-500Hz				
	Voltage	0 to maximum input voltage (RMS) (Note: 0 to 230 V for 115 V Single Phase Units)				
Protective Features	Trip	Missing control power, over current, over voltage, under voltage, over temperature (motor or control), output shorted or grounded, motor overload				
	Stall Prevention	Over voltage suppression, overcurrent suppression				
	External Output	LED trip condition indicators, 4 assignable logic outputs, 2 assignable analog outputs				
	Short Circuit	Phase to phase, phase to ground				
	Electronic Motor Overload	Meets UL508C (I^2T)				
Environmental Conditions	Temperature	-10 to 45°C. Derate 3% per °C to maximum ambient temperature of 55°C.				
	Cooling	Forced air				
	Enclosure	NEMA 1 (all ratings) NEMA 4X (1 to 10 Hp, Indoor use only)				
	Altitude	Sea level to 3300 Feet (1000 Meters) Derate 2% per 1000 Feet (303 Meters) above 3300 Feet				
	Humidity	NEMA 1: 10 to 90% RH Non-Condensing NEMA 4X: To 100% RH Condensing				
	Shock / Vibration	1G / 0.5G at 10Hz to 60Hz				
	Storage Temperature	-10 to +65°C				
Keypad Display	Display	LCD Graphical 128x64 Pixel				
	Keys	14 key membrane with tactile feedback				
	Functions	Output status monitoring, Digital speed control, Parameter setting and display, Diagnostic and Fault log display, Motor run and jog, Local/Remote toggle				
	LED Indicators	Forward run command, Reverse run command, Stop command, Jog active				
	Remote Mount	200 feet (60.6m) maximum from control, NEMA 4 Indoor Rated				
	Trip	Separate message and trace log for each trip, last 10 trips retained in memory				
Control Specifications	Control Method	Microprocessor controlled PWM output, selectable encoderless vector or V/Hz inverter				
	PWM Frequency	Adjustable 1.5-5kHz STD, 5-16 kHz quiet				
	Frequency Setting	±5 VDC, 0-5 VDC ±10 VDC, 0-10 VDC, 4-20 mA or 0-20 mA; digital (keypad), Serial Comms/USB 2.0, and Modbus RTU standard				
	Accel/Decel	0-3600 seconds				
	V/Hz Ratio	Linear to squared reduced, base frequency, output voltage, minimum frequency limit, maximum frequency limit				
	Torque Boost	0-30% of input voltage; automatic with manual override				
	Brake Internal Resistor	20% Duty Cycle standard on Sizes AA and B, 1% Duty Cycle standard on Size C, D				
	Skip Frequency	Three zones 0-Max frequency				
	PC Setup Software	MINT® WorkBench Software available using the USB 2.0 port for commissioning wizard, firmware download, parameter viewer, scope capture and cloning				
	Maximum Output Frequency	500 Hz				
	Selectable Operating Modes	Keypad, Standard Run 2-Wire, Standard Run 3-Wire, 15 Preset Speeds, Fan Pump 2-Wire, Fan Pump 3-Wire, Process Control, 3-SPD ANA 2-Wire, 3-SPD ANA 3-Wire, Electronic Pot 2-Wire, Electronic Pot 3-Wire, Network, Profile Run, Bipolar, PLC				
Analog Inputs	One Differential	±5VDC, ±10VDC, 4-20 mA and 0-20 mA, 11-bit + sign				
	One Single Ended	0 - 10 VDC, 11-bit				
	Input Impedance	80 kOhms (Volt mode); 500 Ohms (Current mode)				
Analog Outputs	Analog Outputs	2 Assignable				
	Full Scale Range	AOUT1 (0-5V, 0-10V, 0-20mA or 4-20mA), AOUT2 (+5V, +10V)				
	Source Current	1 mA maximum (volt mode), 20mA (current mode)				
	Resolution	9 bits				
Digital Inputs	Opto-isolated Inputs	8 Assignable, 1 dedicated input (Drive Enable)				
	Rated Voltage	10 - 30 VDC (active low std., active high with jumper change)				
	Input Impedance	4.71 kOhms				
	Leakage Current	10 µA maximum				
	Update Rate	16 msec				
Digital Outputs (2 Opto Outputs)	Rated Voltage	5 to 30VDC				
	Maximum Current	60 mA Maximum				
	ON Voltage Drop	2 VDC Maximum				
	OFF Leakage Current	0.1 mA Maximum				
	Output Conditions	31 Selectable Conditions				
Digital Outputs (2 Relay Outputs)	Rated Voltage	5 to 30VDC or 240VAC				
	Maximum Current	5A Maximum non-inductive				
	Output Conditions	31 Selectable Conditions				

BALDOR

VS1SP Inverter/Encoderless Vector – NEMA 1 Enclosure

	Catalog Number	Size	Heavy Duty				Normal Duty				List Price	Mult. Sym.
			Hp	kW	Cont. Amps	Peak Amps	Hp	kW	Cont. Amps	Peak Amps		
115/230 Volts - Single Phase Input												
◊	**VS1SP61-1B**	AA	1	0.75	4.2	7.4	2	1.5	6.8	8.5	1,100	EC
◊	**VS1SP62-1B**	AA	2	1.5	6.8	11.9	3	2.2	9.6	12	1,252	EC
◊	**VS1SP63-1B**	AA	3	2.2	9.6	16.8	3	2.2	9.6	12	1,463	EC
230 Volts - Three Phase Input												
◊	**VS1SP21-1B**	AA	1	0.75	4.2	7.35	2	1.5	6.8	8.5	1,000	EC
◊	**VS1SP22-1B**	AA	2	1.5	6.8	11.9	3	2.2	9.6	12	1,138	EC
◊	**VS1SP23-1B**	AA	3	2.2	9.6	16.8	5	3.7	15.2	19	1,330	EC
◊	**VS1SP25-1B**	AA	5	3.7	15.2	26.6	7.5	5.6	22	27.5	1,521	EC
◊	**VS1SP27-1B**	AA	7.5	5.6	22	38.5	7.5	5.6	22	27.5	1,904	EC
◊	**VS1SP210-1B**	B	10	7.5	28	49	15	11	42	52.5	2,681	EC
◊	**VS1SP215-1B**	B	15	11	42	73.5	20	15	54	67.5	3,191	EC
◊	**VS1SP220-1B**	B	20	15	54	94.5	25	18.7	68	85	4,255	EC
◊	**VS1SP225-1B**	C	25	18.7	68	119	30	22.4	80	92	5,106	EC
◊	**VS1SP230-1B**	C	30	22.4	80	140	40	29.8	104	120	6,596	EC
◊	**VS1SP240-1B**	C	40	29.8	104	182	40	29.8	104	120	7,872	EC
◊	**VS1SP250-1B**	D	50	37	130	228	60	45	154	177	10,000	EC
◊	**VS1SP260-1B**	D	60	45	154	270	60	45	154	177	12,703	EC
460 Volts - Three Phase Input												
◊	**VS1SP41-1B**	AA	1	0.75	2.1	3.68	2	1.5	3.4	4.25	1,202	EC
◊	**VS1SP42-1B**	AA	2	1.5	3.4	5.95	3	2.2	4.8	6	1,457	EC
◊	**VS1SP43-1B**	AA	3	2.2	4.8	8.4	5	3.7	7.6	9.5	1,766	EC
◊	**VS1SP45-1B**	AA	5	3.7	7.6	13.3	7.5	5.6	11	13.75	1,915	EC
◊	**VS1SP47-1B**	AA	7.5	5.6	11	19.3	10	7.5	14	17.5	2,426	EC
◊	**VS1SP410-1B**	AA	10	7.4	14	24.5	10	7.5	14	17.5	2,660	EC
◊	**VS1SP415-1B**	B	15	11	21	36.75	20	15	27	33.75	3,404	EC
◊	**VS1SP420-1B**	B	20	15	27	47.25	25	18.7	34	42.5	4,043	EC
◊	**VS1SP425-1B**	B	25	18.7	34	60	30	22	40	50	5,000	EC
◊	**VS1SP430-1B**	C	30	22.4	40	70	40	29.8	52	60	6,064	EC
◊	**VS1SP440-1B**	C	40	29.8	52	91	50	37.3	65	75	7,447	EC
◊	**VS1SP450-1B**	C	50	37.3	65	114	60	44.8	77	89	8,936	EC
◊	**VS1SP460-1B**	D	60	45	77	135	75	56	96	110	9,998	EC
◊	**VS1SP475-1B**	D	75	56	96	168	100	75	124	143	11,596	EC
◊	**VS1SP4100-1B**	D	100	75	124	217	125	93	156	179	13,404	EC
◊	**VS1SP4125-1B**	D	125	93	156	273	125	93	156	179	14,362	EC
◊	**VS1SP4150-1***	E	150	112	180	315	200	149	240	300	17,250	EC
◊	**VS1SP4200-1***	E	200	149	240	420	250	187	302	378	23,000	EC
◊	**VS1SP4250-1***	E	250	187	302	529	300	224	361	451	28,750	EC
◊	**VS1SP4300-1***	F	300	224	361	632	350	261	414	518	31,915	EC
◊	**VS1SP4350-1***	F	350	261	414	725	400	298	477	596	37,234	EC
◊	**VS1SP4400-1***	F	400	298	477	835	450	336	534	668	42,553	EC
◊	**VS1SP4450-1***	F	450	336	534	935	500	373	590	738	48,936	EC

* VS1SP E- and F-Frame Drives do not include an internal dynamic braking transistor.
For applications requiring dynamic braking, see the VS1GV family of drives.

◊ Stock Model Numbers

VS1SP Inverter/Encoderless Vector – NEMA 1 Enclosure

	Catalog Number	Size	Heavy Duty				Normal Duty				List Price	Mult. Sym.
			Hp	kW	Cont. Amps	Peak Amps	Hp	kW	Cont. Amps	Peak Amps		
600 Volts - Three Phase Input												
◊	**VS1SP51-1B**	AA	1	0.75	1.7	3	2	1.5	2.7	3.4	1,322	EC
◊	**VS1SP52-1B**	AA	2	1.5	2.7	4.7	3	2.2	3.9	4.9	1,603	EC
◊	**VS1SP53-1B**	AA	3	2.2	3.9	6.8	5	3.7	6.1	7.6	1,943	EC
◊	**VS1SP55-1B**	AA	5	3.7	6.1	10.7	7.5	5.6	9	11.3	2,106	EC
◊	**VS1SP57-1B**	AA	7.5	5.6	9	15.8	10	7.5	11	13.8	2,668	EC
◊	**VS1SP510-1B**	AA	10	7.5	11	19.3	10	7.5	11	13.8	2,926	EC
◊	**VS1SP515-1B**	B	15	11	17	29.8	20	15	22	27.5	3,745	EC
◊	**VS1SP520-1B**	B	20	15	22	38.5	25	18.7	27	33.8	4,447	EC
◊	**VS1SP525-1B**	B	25	18.7	27	47.2	30	22	32	40	5,500	EC
◊	**VS1SP530-1B**	C	30	22.4	32	56	40	29.8	41	47	6,670	EC
◊	**VS1SP540-1B**	C	40	29.8	41	72	50	37.3	52	60	8,191	EC
◊	**VS1SP550-1B**	C	50	37.3	52	91	60	45	62	71	9,830	EC
◊	**VS1SP560-1B**	D	60	45	62	109	75	56	77	89	11,000	EC
◊	**VS1SP575-1B**	D	75	56	77	135	100	75	99	114	12,755	EC
◊	**VS1SP5100-1B**	D	100	75	99	173	125	93	125	144	14,745	EC
◊	**VS1SP5125-1B**	D	125	93	125	219	150	112	144	166	15,798	EC
◊	**VS1SP5150-1***	E	150	112	144	252	200	149	192	240	18,900	EC
◊	**VS1SP5200-1***	E	200	149	192	336	250	187	242	302	25,200	EC
◊	**VS1SP5250-1***	E	250	187	242	423	300	224	289	361	31,500	EC

* VS1SP E- and F-Frame Drives do not include an internal dynamic braking transistor.
For applications requiring dynamic braking, see the VS1GV family of drives.
◊ Stock Model Numbers

BALDOR

VS1SP Inverter/Encoderless Vector – NEMA 4 Washdown Enclosure

	Catalog Number	Size	Heavy Duty				Normal Duty				List Price	Mult. Sym.
			Hp	kW	Cont. Amps	Peak Amps	Hp	kW	Cont. Amps	Peak Amps		
115/230 Volts - Single Phase Input												
◊	**VS1SP61-4B**	AA	1	0.75	4.2	7.4	2	1.5	6.8	8.5	1,182	EC
◊	**VS1SP62-4B**	AA	2	1.5	6.8	11.9	3	2.2	9.6	12	1,346	EC
◊	**VS1SP63-4B**	AA	3	2.2	9.6	16.8	3	2.2	9.6	12	1,568	EC
230 Volts - Three Phase Input												
◊	**VS1SP21-4B**	AA	1	0.75	4.2	7.35	2	1.5	6.8	8.5	1,074	EC
◊	**VS1SP22-4B**	AA	2	1.5	6.8	11.9	3	2.2	9.6	12	1,223	EC
◊	**VS1SP23-4B**	AA	3	2.2	9.6	16.8	5	3.7	15.2	19	1,429	EC
◊	**VS1SP25-4B**	AA	5	3.7	15.2	26.6	7.5	5.6	22	27.5	1,649	EC
◊	**VS1SP27-4B**	AA	7.5	5.6	22	38.5	7.5	5.6	22	27.5	2,043	EC
460 Volts - Three Phase Input												
◊	**VS1SP41-4B**	AA	1	0.75	2.1	3.68	2	1.5	3.4	4.25	1,330	EC
◊	**VS1SP42-4B**	AA	2	1.5	3.4	5.95	3	2.2	4.8	6	1,511	EC
◊	**VS1SP43-4B**	AA	3	2.2	4.8	8.4	5	3.7	7.6	9.5	1,840	EC
◊	**VS1SP45-4B**	AA	5	3.7	7.6	13.3	7.5	5.6	11	13.75	2,106	EC
◊	**VS1SP47-4B**	AA	7.5	5.6	11	19.3	10	7.5	14	17.5	2,766	EC
◊	**VS1SP410-4B**	AA	10	7.4	14	24.5	10	7.4	14	17.5	2,926	EC
600 Volts - Three Phase Input												
◊	**VS1SP51-4B**	AA	1	0.75	1.7	3	2	1.5	2.7	3.4	1,463	EC
◊	**VS1SP52-4B**	AA	2	1.5	2.7	4.7	3	2.2	3.9	4.9	1,662	EC
◊	**VS1SP53-4B**	AA	3	2.2	3.9	6.8	5	3.7	6.1	7.6	2,024	EC
◊	**VS1SP55-4B**	AA	5	3.7	6.1	10.7	7.5	5.6	9	11.3	2,317	EC
◊	**VS1SP57-4B**	AA	7.5	5.6	9	15.8	10	7.5	11	13.8	3,043	EC
◊	**VS1SP510-4B**	AA	10	7.5	11	19.3	10	7.5	11	13.8	3,218	EC

See pages 78-80 for dimensions and weights.
See pages 81-82 for optional equipment.

◊ Stock Model Numbers

VS1SP Packaged Drives

Packaged Baldor V*S Drives provide custom solutions for customer applications. Packaged Baldor V*S Drives are available for VS1SP drives from 1 to 500HP. Standard packaged options are shown in this catalog including NEMA 1, 12, 4, 4X & 3R enclosures, Input fusing & circuit breakers, door mounted operators, input/output contactors, bypass, line/load reactors, control transformers, dynamic braking as well as many other peripheral equipment options. If you don't see the option you need, please contact the factory via your Local Baldor District Sales Office, and we will custom engineer it for you.

BALDOR

VS1SP Packaged Drives

240 VAC Base Drive Model Number													
Inverter	**VS1SP 21-1B**	**VS1SP 22-1B**	**VS1SP 23-1B**	**VS1SP 25-1B**	**VS1SP 27-1B**	**VS1SP 210-1B**	**VS1SP 215-1B**	**VS1SP 220-1B**	**VS1SP 225-1B**	**VS1SP 230-1B**	**VS1SP 240-1B**	**VS1SP 250-1B**	**VS1SP 260-1B**
Base Drive List	1000	1138	1330	1521	1904	2681	3,191	4,255	5,106	6,596	7,872	10,000	12,703
HP Rating (110% Overload, Normal Duty)	2	3	5	7.5	10	10	20	25	30	40	50	60	75
HP Rating (150% Overload, Heavy Duty)	1	2	3	5	7.5	10	15	20	25	30	40	50	60
FLA (Heavy Duty)	4.2	7	10	16	22	28	42	53	66	78	104	130	154
Enclosure Options													
NEMA 1 Cabinet Ventilated	1032	1032	1032	1032	1296	1296	1296	1510	1510	1510	1579	1579	1579
NEMA 12 Cabinet Ventilated	1073	1073	1073	1073	1342	1342	1342	1568	1568	1568	1947	1947	1947
NEMA 12 Cabinet with A/C	2211	2211	2211	2211	2786	2786	2786	3369	3369	3369	3952	3952	3952
NEMA 4 Cabinet with A/C	3321	3321	3321	3321	3499	3499	3499	4082	4082	4082	4957	4957	4957
NEMA 4X Cabinet with A/C	3580	3580	3580	3580	4301	4301	4301	5540	5540	5540	6488	6488	6488
NEMA 3R Rainproof	1367	1367	1367	1367	1599	1599	1599	1701	1701	1701	2611	2611	2611
Input Protection & Disconnect Options													
Input Fuses Only	158	158	158	158	158	178	178	245	317	317	611	611	611
Fused Disconnect Switch & Rotary Handle	403	403	403	403	403	438	438	505	757	757	1,208	1,208	1,208
Circuit Breaker Only	600	752	752	752	752	865	865	865	865	865	911	911	911
Circuit Breaker Disconnect & Rotary Handle	1018	1018	1018	1018	1018	1131	1131	1131	1131	1131	1177	1177	1177
Door Mounted Operator Devices													
Door Mounted OIM (Remote Keypad)	75	75	75	75	75	75	75	75	75	75	75	75	75
Maintained Start/Stop Switch	105	105	105	105	105	105	105	105	105	105	105	105	105
Momentary Start/Stop Push Buttons	180	180	180	180	180	180	180	180	180	180	180	180	180
E-Stop Push Button (Mushroom Head)	120	120	120	120	120	120	120	120	120	120	120	120	120
Jog Push Button	90	90	90	90	90	90	90	90	90	90	90	90	90
2 or 3 Position Selection Switch	90	90	90	90	90	90	90	90	90	90	90	90	90
Pilot Light(1)	85	85	85	85	85	85	85	85	85	85	85	85	85
Manual Potentiometer	120	120	120	120	120	120	120	120	120	120	120	120	120
Contactors, Overloads, Starters, Control Transformers & Line Reactors													
Input Contactor(1)	220	220	220	220	220	450	450	450	450	800	800	1050	1050
Output Contactor(1)	220	220	220	220	220	450	450	450	450	800	800	1050	1050
Drive Bypass Control(1)	1160	1160	1160	1160	1160	1850	1850	1850	1850	2900	2900	3650	3650
Motor Overload Relay	200	200	200	200	200	200	250	250	250	310	310	420	420
Blower Motor Starter(1,4)	120	120	120	120	180	180	180	180	180	180	180	180	180
Control Transformer: 460:120 VAC, 250VA (2)	275	275	275	275	275	275	275	275	275	275	275	275	275
3% Impedance Input Line or Load Reactor	292	292	472	495	595	631	665	706	824	1069	1434	1667	1667
Other peripheral equipment													
Space Heater (100W)	120	120	120	120	120	120	120	120	120	120	120	120	120
Analog Input or output Isolator	980	980	980	980	980	980	980	980	980	980	980	980	980
Shunt Trip device	280	280	280	280	280	280	280	280	280	280	280	280	280
Undervoltage Release Device	355	355	355	355	355	355	355	355	355	355	355	355	355
RFI/EMI filter	590	590	590	590	590	810	810	980	980	980	1170	1170	1170
DC Power Supply	210	210	210	210	210	210	210	210	210	210	210	210	210
MOV surge protection	100	100	100	100	100	100	100	100	100	100	100	100	100
Input IEEE 519-1992 Harmonic Filter	3160	3160	3160	3260	5210	6270	7210	7700	7920	9910	9940	12190	12190
Dynamic Braking - Transistor + Resistor													
1200W resistors	849	849	849	849	849	849	849	849	849	849	849	849	849
2400W resistors	1299	1299	1299	1299	1299	1299	1299	1299	1299	1299	1299	1299	1299
4800W resistors	2107	2107	2107	2107	2107	2107	2107	2107	2107	2107	2107	2107	2107

(1) Requires Control Transformer option
(2) Add $100 for each 100VA over 250VA
(3) Add $100 for each 100W over the first 100W
(4) Required on TEBC motors

VS1SP Packaged Drives

480 VAC Base Drive Model Number							
Inverter	**VS1SP 41-1B**	**VS1SP 42-1B**	**VS1SP 43-1B**	**VS1SP 45-1B**	**VS1SP 47-1B**	**VS1SP 410-1B**	**VS1SP 415-1B**
Base Drive List	1202	1457	1766	1915	2,26	2660	3404
HP Rating (110% Overload, Normal Duty)	2	3	5	7.5	10	10	20
HP Rating (150% Overload, Heavy Duty)	1	2	3	5	7.5	10	15
FLA (Heavy Duty)	2.1	2.4	4.8	7.6	11	14	21
Enclosure Options							
NEMA 1 Cabinet Ventilated	1147	1147	1147	1147	1147	1147	1147
NEMA 12 Cabinet Ventilated	1193	1193	1193	1193	1193	1492	1492
NEMA 12 Cabinet with A/C	2457	2457	2457	2457	2457	3096	3096
NEMA 4 Cabinet with A/C	3690	3690	3690	3690	3690	3888	3888
NEMA 4X Cabinet with A/C	3978	3978	3978	3978	3978	4779	4779
NEMA 3R Rainproof	1519	1519	1519	1519	1519	1777	1777
Input Protection & Disconnect Options							
Input Fuses Only	158	158	158	158	158	178	178
Fused Disconnect Switch & Rotary Handle	403	403	403	403	403	438	438
Circuit Breaker Only	600	752	752	752	752	865	865
Circuit Breaker Disconnect & Rotary Handle	1018	1018	1018	1018	1018	1131	1131
Door Mounted Operator Devices							
Door Mounted OIM (Remote Keypad)	75	75	75	75	75	75	75
Maintained Start/Stop Switch	105	105	105	105	105	105	105
Momentary Start/Stop Push Buttons	180	180	180	180	180	180	180
E-Stop Push Button (Mushroom Head)	120	120	120	120	120	120	120
Jog Push Button	90	90	90	90	90	90	90
2 or 3 Position Selection Switch	90	90	90	90	90	90	90
Pilot Light(1)	85	85	85	85	85	85	85
Manual Potentiometer	120	120	120	120	120	120	120
Contactors, Overloads, Starters, Control Transformers & Line Reactors							
Input Contactor(1)	220	220	220	220	220	220	220
Output Contactor(1)	220	220	220	220	220	220	220
Drive Bypass Control(1)	1160	1160	1160	1160	1160	1160	1160
Motor Overload Relay	200	200	200	200	200	200	250
Blower Motor Starter(1,4)	120	120	120	120	180	180	180
Control Transformer: 460:120 VAC, 250VA (2)	275	275	275	275	275	275	275
3% Impedance Input Line or Load Reactor	177	204	204	239	330	344	413
Other peripheral equipment							
Space Heater (100W)	120	120	120	120	120	120	120
Analog Input or output Isolator	980	980	980	980	980	980	980
Shunt Trip device	280	280	280	280	280	280	280
Undervoltage Release Device	355	355	355	355	355	355	355
RFI/EMI filter	590	590	590	590	590	810	810
DC Power Supply	210	210	210	210	210	210	210
MOV surge protection	100	100	100	100	100	100	100
Input IEEE 519-1992 Harmonic Filter	3160	3160	3160	3160	3160	3260	5210
Dynamic Braking - Transistor + Resistor							
1200W resistors	849	849	849	849	849	849	849
2400W resistors	1299	1299	1299	1299	1299	1299	1299
4800W resistors	2107	2107	2107	2107	2107	2107	2107

(1) Requires Control Transformer option
(2) Add $100 for each 100VA over 250VA
(3) Add $100 for each 100W over the first 100W
(4) Required on TEBC motors

BALDOR

VS1SP Packaged Drives

480 VAC Base Drive Model Number							
Inverter	**VS1SP 420-1B**	**VS1SP 425-1B**	**VS1SP 430-1B**	**VS1SP 440-1B**	**VS1SP 450-1B**	**VS1SP 460-1B**	**VS1SP 475-1B**
Base Drive List	4043	5000	6064	7447	8936	9998	11596
HP Rating (110% Overload)	25	30	40	50	60	75	100
HP Rating (150% Overload)	20	25	30	40	50	60	75
FLA @ 2.5kHz	27	34	40	52	65	77	96
Enclosure Options							
NEMA 1 Cabinet Ventilated	1678	1678	1678	1678	1755	1755	2083
NEMA 12 Cabinet Ventilated	1743	1743	1743	1743	2164	2164	2480
NEMA 12 Cabinet with A/C	3744	3744	3744	3744	4392	4392	4968
NEMA 4 Cabinet with A/C	4536	4536	4536	4536	5508	5508	6318
NEMA 4X Cabinet with A/C	6156	6156	6156	6156	7209	7209	7938
NEMA 3R Rainproof	1890	1890	1890	1890	2902	2902	3881
Input Protection & Disconnect Options							
Input Fuses Only	245	317	317	317	317	317	550
Fused Disconnect Switch & Rotary Handle	505	757	757	1,208	1208	1208	1485
Circuit Breaker Only	865	865	865	911	1100	1100	1100
Circuit Breaker Disconnect & Rotary Handle	1131	1131	1131	1177	1310	1310	1310
Door Mounted Operator Devices							
Door Mounted OIM (Remote Keypad)	75	75	75	75	75	75	75
Maintained Start/Stop Switch	105	105	105	105	105	105	105
Momentary Start/Stop Push Buttons	180	180	180	180	180	180	180
E-Stop Push Button (Mushroom Head)	120	120	120	120	120	120	120
Jog Push Button	90	90	90	90	90	90	90
2 or 3 Position Selection Switch	90	90	90	90	90	90	90
Pilot Light(1)	85	85	85	85	85	85	85
Manual Potentiometer	120	120	120	120	120	120	120
Contactors, Overloads, Starters, Control Transformers & Line Reactors							
Input Contactor(1)	460	460	460	460	450	450	800
Output Contactor(1)	460	460	460	460	450	450	800
Drive Bypass Control(1)	1880	1880	1880	1880	1400	1400	2100
Motor Overload Relay	250	250	310	310	310	310	420
Blower Motor Starter(1,4)	180	180	180	180	180	220	220
Control Transformer: 460:120 VAC, 250VA (2)	275	275	275	275	275	275	275
3% Impedance Input Line or Load Reactor	524	556	589	621	—	—	—
Other peripheral equipment							
Space Heater (100W)	120	120	120	120	120	120	120
Analog Input or output Isolator	980	980	980	980	980	980	980
Shunt Trip device	280	280	280	280	280	280	280
Undervoltage Release Device	355	355	355	355	355	355	355
RFI/EMI filter	980	980	980	1170	1170	1170	4590
DC Power Supply	210	210	210	210	210	210	210
MOV surge protection	100	100	100	100	100	100	100
Input IEEE 519-1992 Harmonic Filter	6270	7210	7210	7700	7920	9910	9940
Dynamic Braking – Transistor + Resistor							
1200W resistors	849	849	849	849	849	849	849
2400W resistors	1299	1299	1299	1299	1299	1299	1299
4800W resistors	2107	2107	2107	2107	2107	2107	2107

(1) Requires Control Transformer option
(2) Add $100 for each 100VA over 250VA
(3) Add $100 for each 100W over the first 100W
(4) Required on TEBC motors

VS1SP Packaged Drives

480 VAC Base Drive Model Number									
Inverter	**VS1SP 4100-1B**	**VS1SP 4125-1B**	**VS1SP 4150-1B**	**VS1SP 4200-1B**	**VS1SP 4250-1B**	**VS1SP 4300-1**	**VS1SP 4350-1**	**VS1SP 4400-1**	**VS1SP 4450-1**
Base Drive List	13404	14362	17250	23000	28750	34500	40250	46000	51750
HP Rating (110% Overload)	125	150	200	250	300	350	400	450	500
HP Rating (150% Overload)	100	125	150	200	250	300	350	400	450
FLA @ 2.5kHz	124	156	180	240	302	361	414	477	534
Enclosure Options									
NEMA 1 Cabinet Ventilated	2083	2083	2625	2625	2625	4280	4280	4280	4280
NEMA 12 Cabinet Ventilated	2480	2480	3224	3224	3224				
NEMA 12 Cabinet with A/C	4968	4968	6560	6560	6560				
NEMA 4 Cabinet with A/C	6318	6318	8640	8640	8640				
NEMA 4X Cabinet with A/C	7938	7938	10080	10080	10080				
NEMA 3R Rainproof	3881	3881	5725	5725	5725				
Input Protection & Disconnect Options									
Input Fuses Only	550	550	550	900	900				
Fused Disconnect Switch & Rotary Handle	1485	1485	1485	1680	1680				
Circuit Breaker Only	1400	1400	1400	1800	1800	7420	7420	7420	7420
Circuit Breaker Disconnect & Rotary Handle	1625	1625	1625	2000	2000	7770	7770	7770	7770
Door Mounted Operator Devices									
Door Mounted OIM (Remote Keypad)	75	75	75	75	75				
Maintained Start/Stop Switch	105	105	105	105	105				
Momentary Start/Stop Push Buttons	180	180	180	180	180				
E-Stop Push Button (Mushroom Head)	120	120	120	120	120				
Jog Push Button	90	90	90	90	90				
2 or 3 Position Selection Switch	90	90	90	90	90				
Pilot Light(1)	85	85	85	85	85				
Manual Potentiometer	120	120	120	120	120				
Contactors, Overloads, Starters, Control Transformers & Line Reactors									
Input Contactor(1)	800	1050	1050	1050	2500				
Output Contactor(1)	800	1050	1050	1050	2500				
Drive Bypass Control(1)	2100	2600	2600	2600	5500	20690	25050	25050	28485
Motor Overload Relay	420	420	550	550	550				
Blower Motor Starter(1,4)	220	220	220	220	220				
Control Transformer: 460:120 VAC, 250VA (2)	275	275	275	275	275				
3% Impedance Input Line or Load Reactor	—	—	—	—	—				
Other peripheral equipment									
Space Heater (100W)	120	120	120	120	120				
Analog Input or output Isolator	980	980	980	980	980				
Shunt Trip device	280	280	280	280	280				
Undervoltage Release Device	355	355	355	355	355				
RFI/EMI filter	4590	4590	8290	8290	13350				
DC Power Supply	210	210	210	210	210				
MOV surge protection	100	100	100	100	100				
Input IEEE 519-1992 Harmonic Filter	12190	15420	17460	19320	26080				
Dynamic Braking – Transistor + Resistor									
1200W resistors	849	849	849	849	849				
2400W resistors	1299	1299	1299	1299	1299				
4800W resistors	2107	2107	2107	2107	2107				
4800W resistors	2107	2107	2107	2107	2107				

(1) Requires Control Transformer option
(2) Add $100 for each 100VA over 250VA
(3) Add $100 for each 100W over the first 100W
(4) Required on TEBC motors

The bypass option includes:
- bypass contactor - reduced voltage starter (digital soft start) - additional bay (for bypass contactor, digital soft start, and wiring)

BALDOR

VS1SP Packaged Drives

575 VAC Base Drive Model Number											
Inverter	**VS1SP 51-1B**	**VS1SP 52-1B**	**VS1SP 53-1B**	**VS1SP 55-1B**	**VS1SP 57-1B**	**VS1SP 510-1B**	**VS1SP 515-1B**	**VS1SP 520-1B**	**VS1SP 525-1B**	**VS1SP 530-1B**	**VS1SP 540-1B**
Base Drive List	1322	1603	1943	2106	2668	2926	3745	4447	5500	6670	8191
HP Rating (110% Overload, Normal Duty)	2	3	5	7.5	10	10	20	25	30	40	50
HP Rating (150% Overload, Heavy Duty)	1	2	3	5	7.5	10	15	20	25	30	40
FLA (Heavy Duty)	1.7	2.7	3.9	6.1	9	11	17	22	27	32	41
Base Drive List	2106	2188	2282	2574	2959	3361	4213	4915	6202	7255	9128
Enclosure Options											
NEMA 1 Cabinet Ventilated	1147	1147	1147	1147	1147	1147	1147	1678	1678	1678	1678
NEMA 12 Cabinet Ventilated	1193	1193	1193	1193	1193	1492	1492	1743	1743	1743	1743
NEMA 12 Cabinet with A/C	2457	2457	2457	2457	2457	3870	3870	4680	4680	4680	4680
NEMA 4 Cabinet with A/C	3690	3690	3690	3690	3690	3888	3888	4536	4536	4536	4536
NEMA 4X Cabinet with A/C	3978	3978	3978	3978	3978	4779	4779	6156	6156	6156	6156
NEMA 3R Rainproof	1519	1519	1519	1519	1519	1777	1777	1890	1890	1890	1890
Input Protection & Disconnect Options											
Input Fuses Only	158	158	158	158	158	178	178	245	317	317	611
Fused Disconnect Switch & Rotary Handle	403	403	403	403	403	438	438	505	757	757	1,208
Circuit Breaker Only	600	752	752	752	752	865	865	865	865	865	911
Circuit Breaker Disconnect & Rotary Handle	1018	1018	1018	1018	1018	1131	1131	1131	1131	1131	1177
Door Mounted Operator Devices											
Door Mounted OIM (Remote Keypad)	75	75	75	75	75	75	75	75	75	75	75
Maintained Start/Stop Switch	105	105	105	105	105	105	105	105	105	105	105
Momentary Start/Stop Push Buttons	180	180	180	180	180	180	180	180	180	180	180
E-Stop Push Button (Mushroom Head)	120	120	120	120	120	120	120	120	120	120	120
Jog Push Button	90	90	90	90	90	90	90	90	90	90	90
2 or 3 Position Selection Switch	90	90	90	90	90	90	90	90	90	90	90
Pilot Light(1)	85	85	85	85	85	85	85	85	85	85	85
Manual Potentiometer	120	120	120	120	120	120	120	120	120	120	120
Contactors, Overloads, Starters, Control Transformers & Line Reactors											
Input Contactor(1)	220	220	220	220	220	220	220	220	220	450	450
Output Contactor(1)	220	220	220	220	220	220	220	220	220	450	450
Drive Bypass Control(1)	1160	1160	1160	1160	1160	1160	1160	1160	1160	1850	1850
Motor Overload Relay	200	200	200	200	200	200	200	250	250	250	310
Blower Motor Starter(1,4)	120	120	120	120	180	180	180	180	180	180	180
Control Transformer: 460:120 VAC, 250VA (2)	275	275	275	275	275	275	275	275	275	275	275
3% Impedance Input Line OR Load Reactor	273	273	424	362	478	499	522	823	823	875	704
Other peripheral equipment											
Space Heater (100W)	120	120	120	120	120	120	120	120	120	120	120
Analog Input or output Isolator	980	980	980	980	980	980	980	980	980	980	980
Shunt Trip device	280	280	280	280	280	280	280	280	280	280	280
Undervoltage Release Device	355	355	355	355	355	355	355	355	355	355	355
RFI/EMI filter	590	590	590	590	590	590	810	810	810	980	980
DC Power Supply	210	210	210	210	210	210	210	210	210	210	210
MOV surge protection	100	100	100	100	100	100	100	100	100	100	100
Input IEEE 519-1992 Harmonic Filter	4420	4420	4420	4420	4420	4420	4580	7290	7290	10090	10300
Dynamic Braking - Transistor + Resistor											
1200W resistors	849	849	849	849	849	849	849	849	849	849	849
2400W resistors	1299	1299	1299	1299	1299	1299	1299	1299	1299	1299	1299
4800W resistors	2107	2107	2107	2107	2107	2107	2107	2107	2107	2107	2107
4800W resistors	2107	2107	2107	2107	2107	2107	2107	2107	2107	2107	2107

(1) Requires Control Transformer option
(2) Add $100 for each 100VA over 250VA
(3) Add $100 for each 100W over the first 100W
(4) Required on TEBC motors

VS1SP Packaged Drives

600 VAC Base Drive Model Number								
Inverter	**VS1SP 550-1B**	**VS1SP 560-1B**	**VS1SP 575-1B**	**VS1SP 5100-1B**	**VS1SP 5125-1B**	**VS1SP 5150-1B**	**VS1SP 5200-1**	**VS1SP 5250-1**
Base Drive List	9830	11000	12755	14745	15798	18900	25200	31500
HP Rating (110% Overload, Normal Duty)	60	75	100	125	150	200	250	300
HP Rating (150% Overload, Heavy Duty)	50	60	75	100	125	150	200	250
FLA (Heavy Duty)	52	62	77	99	125	144	192	242
Enclosure Options								
NEMA 1 Cabinet Ventilated	1755	1755	2083	2083	2083	2625	2625	2625
NEMA 12 Cabinet Ventilated	2164	2164	2480	2480	2480	3224	3224	3224
NEMA 12 Cabinet with A/C	4392	4392	4968	4968	4968	6560	6560	6560
NEMA 4 Cabinet with A/C	5508	5508	6318	6318	6318	8640	8640	8640
NEMA 4X Cabinet with A/C	7209	7209	7938	7938	7938	10080	10080	10080
NEMA 3R Rainproof	2902	2902	3881	3881	3881	5725	5725	5725
Input Protection & Disconnect Options								
Input Fuses Only	317	317	550	550	550	550	900	900
Fused Disconnect Switch & Rotary Handle	1208	1208	1485	1485	1485	1485	1680	1680
Circuit Breaker Only	1100	1100	1100	1400	1400	1400	1800	1800
Circuit Breaker Disconnect & Rotary Handle	1310	1310	1310	1625	1625	1625	2000	2000
Door Mounted Operator Devices								
Door Mounted OIM (Remote Keypad)	75	75	75	75	75	75	75	75
Maintained Start/Stop Switch	105	105	105	105	105	105	105	105
Momentary Start/Stop Push Buttons	180	180	180	180	180	180	180	180
E-Stop Push Button (Mushroom Head)	120	120	120	120	120	120	120	120
Jog Push Button	90	90	90	90	90	90	90	90
2 or 3 Position Selection Switch	90	90	90	90	90	90	90	90
Pilot Light(1)	85	85	85	85	85	85	85	85
Manual Potentiometer	120	120	120	120	120	120	120	120
Contactors, Overloads, Starters, Control Transformers & Line Reactors								
Input Contactor(1)	450	450	800	800	1050	1050	1050	2500
Output Contactor(1)	450	450	800	800	1050	1050	1050	2500
Drive Bypass Control(1)	1400	1400	2100	2100	2600	2600	2600	5500
Motor Overload Relay	310	310	420	420	420	550	550	550
Blower Motor Starter(1,4)	180	220	220	220	220	220	220	220
Control Transformer: 460:120 VAC, 250VA (2)	275	275	275	275	275	275	275	275
3% Impedance Input Line OR Load Reactor								
Other peripheral equipment								
Space Heater (100W)	120	120	120	120	120	120	120	120
Analog Input or output Isolator	980	980	980	980	980	980	980	980
Shunt Trip device	280	280	280	280	280	280	280	280
Undervoltage Release Device	355	355	355	355	355	355	355	355
RFI/EMI filter	1170	1170	4590	4590	4590	8290	8290	13350
DC Power Supply	210	210	210	210	210	210	210	210
MOV surge protection	100	100	100	100	100	100	100	100
Input IEEE 519-1992 Harmonic Filter	7920	9910	9940	12190	15420	17460	19320	26080
Dynamic Braking - Transistor + Resistor								
1200W resistors	849	849	849	849	849	849	849	849
2400W resistors	1299	1299	1299	1299	1299	1299	1299	1299
4800W resistors	2107	2107	2107	2107	2107	2107	2107	2107
4800W resistors	2107	2107	2107	2107	2107	2107	2107	2107

(1) Requires Control Transformer option
(2) Add $100 for each 100VA over 250VA
(3) Add $100 for each 100W over the first 100W
(4) Required on TEBC motors

BALDOR

VS1GV Vector Drive

1 thru 3 Hp	**115/230 VAC**	**1 Phase - 50/60 Hz**
1 thru 60 Hp	**230 VAC**	**3 Phase - 50/60 Hz**
1 thru 500 Hp	**460 VAC**	**3 Phase - 50/60 Hz**
1 thru 300 Hp	**600 VAC**	**3 Phase - 50/60 Hz**

Applications: Constant torque or constant horsepower applications. New installations, replacements and original equipment manufacturers (OEM).

Features: NEMA 1 and NEMA 4 enclosure. Output frequency 0 to 500 Hz with peak overload capacity of 175%. Digital speed or torque control. Built-in two and three input PID process control loop. Automatic tuning to motor and full rated torque down to zero speed.

Input Ratings	Voltage	115	230	230	460	600
	Voltage Range	95-130	180-264	180-264	340-528	515-660
	Phase	Single Phase		Three Phase (single phase with derating)		
	Frequency	50/60Hz ± 5%				
	Impedance	1% minimum from mains connection (3% for AA Frame drives)				
Output Ratings	Horsepower	1-3 Hp @ 115/230VAC, 1PH; 1-60 Hp @ 230VAC, 3PH; 1-500 Hp @ 460VAC, 3PH; 1-300 Hp @ 600VAC, 3PH				
	Overload Capacity	Heavy Duty (Constant Torque) = 150% for 60 seconds, 175% for 3 seconds				
		Normal Duty (Variable Torque) = 115% for 60 seconds				
	Frequency	0-500Hz				
	Voltage	0 to maximum input voltage (RMS) (Note: 0 to 230 V for 115 V Single Phase Units)				
Protective Features	Trip	Missing control power, over current, over voltage, under voltage, over temperature (motor or control), output shorted or grounded, motor overload, encoder loss.				
	Stall Prevention	Over voltage suppression, overcurrent suppression				
	External Output	LED trip condition indicators, 4 assignable logic outputs, 2 assignable analog outputs				
	Short Circuit	Phase to phase, phase to ground				
	Electronic Motor Overload	Meets UL508C (I^2T)				
Environmental Conditions	Temperature	-10 to 45°C. Derate 3% per °C to maximum ambient temperature of 55°C.				
	Cooling	Forced air				
	Enclosure	NEMA 1 (all ratings) NEMA 4X (1 to 10 Hp, Indoor use only)				
	Altitude	Sea level to 3300 Feet (1000 Meters) Derate 2% per 1000 Feet (303 Meters) above 3300 Feet				
	Humidity	NEMA 1: 10 to 90% RH Non-Condensing NEMA 4X: To 100% RH Condensing				
	Shock / Vibration	1G / 0.5G at 10Hz to 60Hz				
	Storage Temperature	-10 to +65°C				
Keypad Display	Display	LCD Graphical 128x64 Pixel				
	Keys	14 key membrane with tactile feedback				
	Functions	Output status monitoring, Digital speed control, Parameter setting and display, Diagnostic and Fault log display, Motor run and jog, Local/Remote toggle, One-step tuning				
	LED Indicators	Forward run command, Reverse run command, Stop command, Jog active				
	Remote Mount	200 feet (60.6m) maximum from control, NEMA 4 Indoor Rated				
	Trip	Separate message and trace log for each trip, last 10 trips retained in memory				
Control Specifications	Control Method	Microprocessor controlled PWM output, selectable closed loop vector, encoderless vector or V/Hz inverter				
	PWM Frequency	Adjustable 1.5-5kHz STD, 5-16 kHz quiet				
	Frequency Setting	±5 VDC, 0-5 VDC ±10 VDC, 0-10 VDC, 4-20 mA or 0-20 mA; digital (keypad), Serial Comms/USB 2.0, and Modbus RTU standard				
	Accel/Decel	0-3600 seconds				
	Brake Internal Resistor	20% Duty Cycle standard on Sizes AA and B, 1% Duty Cycle standard on Size C, D, transistor only standard size E				
	Motor Matching	Automatic tuning to motor with manual override				
	PC Setup Software	MINT® WorkBench Software available using the USB 2.0 port for commissioning wizard, firmware download, parameter viewer, scope capture and cloning				
	Maximum Output Frequency	500 Hz				
	Selectable Operating Modes	Keypad, Standard Run 2-Wire, Standard Run 3-Wire, 15 Preset Speeds, Fan Pump 2-Wire, Fan Pump 3-Wire, Process Control, 3-SPD ANA 2-Wire, 3-SPD ANA 3-Wire, Electronic Pot 2-Wire, Electronic Pot 3-Wire, Network, Profile Run, Bipolar, PLC, Pulse Follower				
Motor Feedback	Feedback Type	Incremental encoder coupled to motor shaft; optional resolver feedback				
	Pulses/Rev	60-20,000 selectable, 1024 standard				
	Input	2 channel in quadrature, 5 or 12 VDC, differential				
	Marker Pulse	Required for position orientation				
	Power Output	5 VDC, 12 VDC, 300 mA maximum				
	Max. Frequency	4 MHz				
	Positioning	Buffered encoder pulse train output for position loop controller				
Analog Inputs	One Differential	±5VDC, ±10VDC, 4-20 mA and 0-20 mA, 11-bit + sign				
	One Single Ended	0 - 10 VDC, 11-bit				
	Input Impedance	80 kOhms (Volt mode); 500 Ohms (Current mode)				
Analog Outputs	Analog Outputs	2 Assignable				
	Full Scale Range	AOUT1 (0-5V, 0-10V, 0-20mA or 4-20mA), AOUT2 (+5V, +10V)				
	Source Current	1 mA maximum (volt mode), 20mA (current mode)				
	Resolution	9 bits				
Digital Inputs	Opto-isolated Inputs	8 Assignable, 1 dedicated input (Drive Enable)				
	Rated Voltage	10 - 30 VDC (active low std., active high with jumper change)				
	Input Impedance	4.71 kOhms				
	Leakage Current	10 µA maximum				
	Update Rate	16 msec				
Digital Outputs (2 Opto Outputs)	Rated Voltage	5 to 30VDC				
	Maximum Current	60 mA Maximum				
	ON Voltage Drop	2 VDC Maximum				
	OFF Leakage Current	0.1 mA Maximum				
	Output Conditions	31 Selectable Conditions				
Digital Outputs (2 Relay Outputs)	Rated Voltage	5 to 30VDC or 240VAC				
	Maximum Current	5A Maximum non-inductive				
	Output Conditions	31 Selectable Conditions				

VS1GV Closed Loop Vector

NEMA 1 Enclosure

	Catalog Number	Size	Heavy Duty				Normal Duty				List Price	Mult. Sym.
			Hp	kW	Cont. Amps	Peak Amps	Hp	kW	Cont. Amps	Peak Amps		
115/230 Volts - Single Phase Input												
◊	**VS1GV61-1B**	AA	1	0.75	4.2	7.4	2	1.5	6.8	8.5	1,545	EC
◊	**VS1GV62-1B**	AA	2	1.5	6.8	11.9	3	2.2	9.6	12	1,744	EC
◊	**VS1GV63-1B**	AA	3	2.2	9.6	16.8	3	2.2	9.6	12	1,943	EC
230 Volts - Three Phase Input												
◊	**VS1GV21-1B**	AA	1	0.75	4.2	7.35	2	1.5	6.8	8.5	1,404	EC
◊	**VS1GV22-1B**	AA	2	1.5	6.8	11.9	3	2.2	9.6	12	1,585	EC
◊	**VS1GV23-1B**	AA	3	2.2	9.6	16.8	5	3.7	15.2	19	1,766	EC
◊	**VS1GV25-1B**	AA	5	3.7	15.2	26.6	7.5	5.6	22	27.5	2,043	EC
◊	**VS1GV27-1B**	AA	7.5	5.6	22	38.5	7.5	5.6	22	27.5	2,309	EC
◊	**VS1GV210-1B**	B	10	7.5	28	49	15	11	42	52.5	3,138	EC
◊	**VS1GV215-1B**	B	15	11	42	73.5	20	15	54	67.5	3,836	EC
◊	**VS1GV220-1B**	B	20	15	54	94.5	25	18.7	68	85	4,895	EC
◊	**VS1GV225-1B**	C	25	18.7	68	119	30	22.4	80	92	5,745	EC
◊	**VS1GV230-1B**	C	30	22.4	80	140	40	29.8	104	120	7,564	EC
◊	**VS1GV240-1B**	C	40	29.8	104	182	40	29.8	104	120	8,723	EC
◊	**VS1GV250-1B**	D	50	37	130	228	60	45	154	177	11,170	EC
◊	**VS1GV260-1B**	D	60	45	154	270	60	45	154	177	14,303	EC
460 Volts - Three Phase Input												
◊	**VS1GV41-1B**	AA	1	0.75	2.1	3.68	2	1.5	3.4	4.25	1,915	EC
◊	**VS1GV42-1B**	AA	2	1.5	3.4	5.95	3	2.2	4.8	6	1,989	EC
◊	**VS1GV43-1B**	AA	3	2.2	4.8	8.4	5	3.7	7.6	9.5	2,075	EC
◊	**VS1GV45-1B**	AA	5	3.7	7.6	13.3	7.5	5.6	11	13.75	2,340	EC
◊	**VS1GV47-1B**	AA	7.5	5.6	11	19.3	10	7.5	14	17.5	2,690	EC
◊	**VS1GV410-1B**	AA	10	7.4	14	24.5	10	7.5	14	17.5	3,055	EC
◊	**VS1GV415-1B**	B	15	11	21	36.75	20	15	27	33.75	3,830	EC
◊	**VS1GV420-1B**	B	20	15	27	47.25	25	18.7	34	42.5	4,469	EC
◊	**VS1GV425-1B**	B	25	18.7	34	60	30	22	40	50	5,638	EC
◊	**VS1GV430-1B**	C	30	22.4	40	70	40	29.8	52	60	6,596	EC
◊	**VS1GV440-1B**	C	40	29.8	52	91	50	37.3	65	75	8,298	EC
◊	**VS1GV450-1B**	C	50	37.3	65	114	60	44.8	77	89	9,787	EC
◊	**VS1GV460-1B**	D	60	45	77	135	75	56	96	110	10,532	EC
◊	**VS1GV475-1B**	D	75	56	96	168	100	75	124	143	12,340	EC
◊	**VS1GV4100-1B**	D	100	75	124	217	125	93	156	179	14,255	EC
◊	**VS1GV4125-1B**	D	125	93	156	273	125	93	156	179	15,106	EC
◊	**VS1GV4150-1T***	E	150	112	180	315	200	149	240	300	18,150	EC
◊	**VS1GV4200-1T***	E	200	149	240	420	250	187	302	378	24,200	EC
◊	**VS1GV4250-1T***	E	250	187	302	529	300	224	361	451	30,250	EC
◊	**VS1GV4300-1T***	F	300	224	361	632	350	261	414	518	33,511	EC
◊	**VS1GV4350-1T***	F	350	261	414	725	400	298	477	596	39,096	EC
◊	**VS1GV4400-1T***	F	400	298	477	835	450	336	534	668	44,681	EC
◊	**VS1GV4450-1T***	F	450	336	534	935	500	373	590	738	51,382	EC

* VS1GV E- and F-Frame drives include an internal braking transistor only.
An integral braking resistor is not included. If braking is required, an external resistor must be provided.
◊ Stock Model Numbers

BALDOR

VS1GV Closed Loop Vector

NEMA 1 Enclosure

	Catalog Number	Size	Heavy Duty				Normal Duty				List Price	Mult. Sym.
			Hp	kW	Cont. Amps	Peak Amps	Hp	kW	Cont. Amps	Peak Amps		
600 Volts - Three Phase Input												
◊	**VS1GV51-1B**	AA	1	0.75	1.7	3	2	1.5	2.7	3.4	2,106	EC
◊	**VS1GV52-1B**	AA	2	1.5	2.7	4.7	3	2.2	3.9	4.9	2,188	EC
◊	**VS1GV53-1B**	AA	3	2.2	3.9	6.8	5	3.7	6.1	7.6	2,282	EC
◊	**VS1GV55-1B**	AA	5	3.7	6.1	10.7	7.5	5.6	9	11.3	2,574	EC
◊	**VS1GV57-1B**	AA	7.5	5.6	9	15.8	10	7.5	11	13.8	2,959	EC
◊	**VS1GV510-1B**	AA	10	7.5	11	19.3	10	7.5	11	13.8	3,361	EC
◊	**VS1GV515-1B**	B	15	11	17	29.8	20	15	22	27.5	4,213	EC
◊	**VS1GV520-1B**	B	20	15	22	38.5	25	18.7	27	33.8	4,915	EC
◊	**VS1GV525-1B**	B	25	18.7	27	47.2	30	22	32	40	6,202	EC
◊	**VS1GV530-1B**	C	30	22.4	32	56	40	29.8	41	47	7,255	EC
◊	**VS1GV540-1B**	C	40	29.8	41	72	50	37.3	52	60	9,128	EC
◊	**VS1GV550-1B**	C	50	37.3	52	91	60	45	62	71	10,766	EC
◊	**VS1GV560-1B**	D	60	45	62	109	75	56	77	89	11,585	EC
◊	**VS1GV575-1B**	D	75	56	77	135	100	75	99	114	13,574	EC
◊	**VS1GV5100-1B**	D	100	75	99	173	125	93	125	144	15,681	EC
◊	**VS1GV5125-1B**	D	125	93	125	219	150	112	144	166	16,617	EC
◊	**VS1GV5150-1T***	E	150	112	144	252	200	149	192	240	19,950	EC
◊	**VS1GV5200-1T***	E	200	149	192	336	250	187	242	302	26,600	EC
◊	**VS1GV5250-1T***	E	250	187	242	423	300	224	289	361	33,250	EC

* VS1GV E-Frame Drives include an internal dynamic braking transistor only.
An integral braking resistor is not included. If braking is required, an external resistor must be provided.
◊ Stock Model Numbers

VS1GV Closed Loop Vector

NEMA 4 Washdown Enclosure

	Catalog Number	Size	Heavy Duty				Normal Duty				List Price	Mult. Sym.
			Hp	kW	Cont. Amps	Peak Amps	Hp	kW	Cont. Amps	Peak Amps		
115/230 Volts - Single Phase Input												
◊	**VS1GV61-4B**	AA	1	0.75	4.2	7.4	2	1.5	6.8	8.5	1,655	EC
◊	**VS1GV62-4B**	AA	2	1.5	6.8	11.9	3	2.2	9.6	12	1,884	EC
◊	**VS1GV63-4B**	AA	3	2.2	9.6	16.8	3	2.2	9.6	12	2,195	EC
230 Volts - Three Phase Input												
◊	**VS1GV21-4B**	AA	1	0.75	4.2	7.35	2	1.5	6.8	8.5	1,504	EC
◊	**VS1GV22-4B**	AA	2	1.5	6.8	11.9	3	2.2	9.6	12	1,713	EC
◊	**VS1GV23-4B**	AA	3	2.2	9.6	16.8	5	3.7	15.2	19	1,996	EC
◊	**VS1GV25-4B**	AA	5	3.7	15.2	26.6	7.5	5.6	22	27.5	2,309	EC
◊	**VS1GV27-4B**	AA	7.5	5.6	22	38.5	7.5	5.6	22	27.5	2,869	EC
460 Volts - Three Phase Input												
◊	**VS1GV41-4B**	AA	1	0.75	2.1	3.68	2	1.5	3.4	4.25	1,995	EC
◊	**VS1GV42-4B**	AA	2	1.5	3.4	5.95	3	2.2	4.8	6	2,115	EC
◊	**VS1GV43-4B**	AA	3	2.2	4.8	8.4	5	3.7	7.6	9.5	2,393	EC
◊	**VS1GV45-4B**	AA	5	3.7	7.6	13.3	7.5	5.6	11	13.75	2,738	EC
◊	**VS1GV47-4B**	AA	7.5	5.6	11	19.3	10	7.5	14	17.5	3,319	EC
◊	**VS1GV410-4B**	AA	10	7.4	14	24.5	10	7.4	14	17.5	3,511	EC
600 Volts - Three Phase Input												
◊	**VS1GV51-4B**	AA	1	0.75	1.7	3	2	1.5	2.7	3.4	2,194	EC
◊	**VS1GV52-4B**	AA	2	1.5	2.7	4.7	3	2.2	3.9	4.9	2,326	EC
◊	**VS1GV53-4B**	AA	3	2.2	3.9	6.8	5	3.7	6.1	7.6	2,632	EC
◊	**VS1GV55-4B**	AA	5	3.7	6.1	10.7	7.5	5.6	9	11.3	3,012	EC
◊	**VS1GV57-4B**	AA	7.5	5.6	9	15.8	10	7.5	11	13.8	3,651	EC
◊	**VS1GV510-4B**	AA	10	7.5	11	19.3	10	7.5	11	13.8	3,862	EC

See pages 78-80 for dimensions and weights.
See pages 81-82 for optional equipment.

◊ Stock Model Numbers

BALDOR

VS1GV Packaged Drives

Packaged Baldor V*S Drives provide custom solutions for customer applications. Packaged Baldor V*S Drives are available for VS1GV drives from 1 to 500HP. Standard packaged options are shown in this catalog including NEMA 1, 12, 4, 4X & 3R enclosures, Input fusing & circuit breakers, door mounted operators, input/output contactors, bypass, line/load reactors, control transformers, dynamic braking as well as many other peripheral equipment options. If you don't see the option you need, please contact the factory via your Local Baldor District Sales Office, and we will custom engineer it for you.

VS1GV Packaged Drives

240 VAC Base Drive Model Number													
Vector	**VS1GV 21-1B**	**VS1GV 22-1B**	**VS1GV 23-1B**	**VS1GV 25-1B**	**VS1GV 27-1B**	**VS1GV 210-1B**	**VS1GV 215-1B**	**VS1GV 220-1B**	**VS1GV 225-1B**	**VS1GV 230-1B**	**VS1GV 240-1B**	**VS1GV 250-1B**	**VS1GV 260-1B**
Base Drive List	1404	1585	1766	2043	2309	3138	3836	4895	5745	7564	8723	11170	14303
HP Rating (110% Overload, Normal Duty)	2	3	5	7.5	10	10	20	25	30	40	50	60	75
HP Rating (150% Overload, Heavy Duty)	1	2	3	5	7.5	10	15	20	25	30	40	50	60
FLA (Heavy Duty)	4.2	7	10	16	22	28	42	53	66	78	104	130	154
Enclosure Options													
NEMA 1 Cabinet Ventilated	1032	1032	1032	1032	1296	1296	1296	1510	1510	1510	1579	1579	1579
NEMA 12 Cabinet Ventilated	1073	1073	1073	1073	1342	1342	1342	1568	1568	1568	1947	1947	1947
NEMA 12 Cabinet with A/C	2211	2211	2211	2211	2786	2786	2786	3369	3369	3369	3952	3952	3952
NEMA 4 Cabinet with A/C	3321	3321	3321	3321	3499	3499	3499	4082	4082	4082	4957	4957	4957
NEMA 4X Cabinet with A/C	3580	3580	3580	3580	4301	4301	4301	5540	5540	5540	6488	6488	6488
NEMA 3R Rainproof	1367	1367	1367	1367	1599	1599	1599	1701	1701	1701	2611	2611	2611
Input Protection & Disconnect Options													
Input Fuses Only	158	158	158	158	158	178	178	245	317	317	611	611	611
Fused Disconnect Switch & Rotary Handle	403	403	403	403	403	438	438	505	757	757	1208	1208	1208
Circuit Breaker Only	600	752	752	752	752	865	865	865	865	865	911	911	911
Circuit Breaker Disconnect & Rotary Handle	1018	1018	1018	1018	1018	1131	1131	1131	1131	1131	1177	1177	1177
Door Mounted Operator Devices													
Door Mounted OIM (Remote Keypad)	75	75	75	75	75	75	75	75	75	75	75	75	75
Maintained Start/Stop Switch	105	105	105	105	105	105	105	105	105	105	105	105	105
Momentary Start/Stop Push Buttons	180	180	180	180	180	180	180	180	180	180	180	180	180
E-Stop Push Button (Mushroom Head)	120	120	120	120	120	120	120	120	120	120	120	120	120
Jog Push Button	90	90	90	90	90	90	90	90	90	90	90	90	90
2 or 3 Position Selection Switch	90	90	90	90	90	90	90	90	90	90	90	90	90
Pilot Light(1)	85	85	85	85	85	85	85	85	85	85	85	85	85
Manual Potentiometer	120	120	120	120	120	120	120	120	120	120	120	120	120
Contactors, Overloads, Starters, Control Transformers & Line Reactors													
Input Contactor(1)	220	220	220	220	220	450	450	450	450	800	800	1050	1050
Output Contactor(1)	220	220	220	220	220	450	450	450	450	800	800	1050	1050
Drive Bypass Control(1)	1160	1160	1160	1160	1160	1850	1850	1850	1850	2900	2900	3650	3650
Motor Overload Relay	200	200	200	200	200	200	250	250	250	310	310	420	420
Blower Motor Starter(1,4)	120	120	120	120	180	180	180	180	180	180	180	180	180
Control Transformer: 460:120 VAC, 250VA (2)	275	275	275	275	275	275	275	275	275	275	275	275	275
3% Impedance Input Line or Load Reactor	292	292	472	495	595	631	665	706	824	1069	1434	1667	1667
Other peripheral equipment													
Space Heater (100W)	120	120	120	120	120	120	120	120	120	120	120	120	120
Analog Input or output Isolator	980	980	980	980	980	980	980	980	980	980	980	980	980
Shunt Trip device	280	280	280	280	280	280	280	280	280	280	280	280	280
Undervoltage Release Device	355	355	355	355	355	355	355	355	355	355	355	355	355
RFI/EMI filter	590	590	590	590	590	810	810	980	980	980	1170	1170	1170
DC Power Supply	210	210	210	210	210	210	210	210	210	210	210	210	210
MOV surge protection	100	100	100	100	100	100	100	100	100	100	100	100	100
Input IEEE 519-1992 Harmonic Filter	3160	3160	3160	3260	5210	6270	7210	7700	7920	9910	9940	12190	12190
Dynamic Braking - Transistor + Resistor													
1200W resistors	849	849	849	849	849	849	849	849	849	849	849	849	849
2400W resistors	1299	1299	1299	1299	1299	1299	1299	1299	1299	1299	1299	1299	1299
4800W resistors	2107	2107	2107	2107	2107	2107	2107	2107	2107	2107	2107	2107	2107

(1) Requires Control Transformer option
(2) Add $100 for each 100VA over 250VA
(3) Add $100 for each 100W over the first 100W
(4) Required on TEBC motors

BALDOR

VS1GV Packaged Drives

480 VAC Base Drive Model Number											
Vector	**VS1GV 41-1B**	**VS1GV 42-1B**	**VS1GV 43-1B**	**VS1GV 45-1B**	**VS1GV 47-1B**	**VS1GV 410-1B**	**VS1GV 415-1B**	**VS1GV 420-1B**	**VS1GV 425-1B**	**VS1GV 430-1B**	**VS1GV 440-1B**
Base Drive List	1915	1989	2075	2340	2690	3055	3830	4469	5638	6596	8298
HP Rating (110% Overload, Normal Duty)	2	3	5	7.5	10	10	20	25	30	40	50
HP Rating (150% Overload, Heavy Duty)	1	2	3	5	7.5	10	15	20	25	30	40
FLA (Heavy Duty)	2.1	2.4	4.8	7.6	11	14	21	27	34	40	52
Enclosure Options											
NEMA 1 Cabinet Ventilated	1147	1147	1147	1147	1147	1147	1147	1678	1678	1678	1678
NEMA 12 Cabinet Ventilated	1193	1193	1193	1193	1193	1492	1492	1743	1743	1743	1743
NEMA 12 Cabinet with A/C	2457	2457	2457	2457	2457	3096	3096	3744	3744	3744	3744
NEMA 4 Cabinet with A/C	3690	3690	3690	3690	3690	3888	3888	4536	4536	4536	4536
NEMA 4X Cabinet with A/C	3978	3978	3978	3978	3978	4779	4779	6156	6156	6156	6156
NEMA 3R Rainproof	1519	1519	1519	1519	1519	1777	1777	1890	1890	1890	1890
Input Protection & Disconnect Options											
Input Fuses Only	158	158	158	158	158	178	178	245	317	317	317
Fused Disconnect Switch & Rotary Handle	403	403	403	403	403	438	438	505	757	757	1208
Circuit Breaker Only	600	752	752	752	752	865	865	865	865	865	911
Circuit Breaker Disconnect & Rotary Handle	1018	1018	1018	1018	1018	1131	1131	1131	1131	1131	1177
Door Mounted Operator Devices											
Door Mounted OIM (Remote Keypad)	75	75	75	75	75	75	75	75	75	75	75
Maintained Start/Stop Switch	105	105	105	105	105	105	105	105	105	105	105
Momentary Start/Stop Push Buttons	180	180	180	180	180	180	180	180	180	180	180
E-Stop Push Button (Mushroom Head)	120	120	120	120	120	120	120	120	120	120	120
Jog Push Button	90	90	90	90	90	90	90	90	90	90	90
2 or 3 Position Selection Switch	90	90	90	90	90	90	90	90	90	90	90
Pilot Light(1)	85	85	85	85	85	85	85	85	85	85	85
Manual Potentiometer	120	120	120	120	120	120	120	120	120	120	120
Contactors, Overloads, Starters, Control Transformers & Line Reactors											
Input Contactor(1)	220	220	220	220	220	220	220	460	460	460	460
Output Contactor(1)	220	220	220	220	220	220	220	460	460	460	460
Drive Bypass Control(1)	1160	1160	1160	1160	1160	1160	1160	1880	1880	1880	1880
Motor Overload Relay	200	200	200	200	200	200	250	250	250	310	310
Blower Motor Starter(1,4)	120	120	120	120	180	180	180	180	180	180	180
Control Transformer: 460:120 VAC, 250VA (2)	275	275	275	275	275	275	275	275	275	275	275
3% Impedance Input Line or Load Reactor	177	204	204	239	330	344	413	524	556	589	621
Other peripheral equipment											
Space Heater (100W)	120	120	120	120	120	120	120	120	120	120	120
Analog Input or output Isolator	980	980	980	980	980	980	980	980	980	980	980
Shunt Trip device	280	280	280	280	280	280	280	280	280	280	280
Undervoltage Release Device	355	355	355	355	355	355	355	355	355	355	355
RFI/EMI filter	590	590	590	590	590	810	810	980	980	980	1170
DC Power Supply	210	210	210	210	210	210	210	210	210	210	210
MOV surge protection	100	100	100	100	100	100	100	100	100	100	100
Input IEEE 519-1992 Harmonic Filter	3160	3160	3160	3160	3160	3260	5210	6270	7210	7210	7700
Dynamic Braking - Transistor + Resistor											
1200W resistors	849	849	849	849	849	849	849	849	849	849	849
2400W resistors	1299	1299	1299	1299	1299	1299	1299	1299	1299	1299	1299
4800W resistors	2107	2107	2107	2107	2107	2107	2107	2107	2107	2107	2107

(1) Requires Control Transformer option
(2) Add $100 for each 100VA over 250VA
(3) Add $100 for each 100W over the first 100W
(4) Required on TEBC motors

VS1GV Packaged Drives

480 VAC Base Drive Model Number												
Vector	**VS1GV 450-1B**	**VS1GV 460-1B**	**VS1GV 475-1B**	**VS1GV 4100-1B**	**VS1GV 4125-1B**	**VS1GV 4150-1T**	**VS1GV 4200-1T**	**VS1GV 4250-1T**	**VS1GV 4300-1T**	**VS1GV 4350-1T**	**VS1GV 4400-1T**	**VS1GV 4450-1T**
Base Drive List	9787	10532	12340	14255	15106	18150	24200	30250	36300	42350	48400	54450
HP Rating (110% Overload, Normal Duty)	60	75	100	125	150	200	250	300	350	400	450	500
HP Rating (150% Overload, Heavy Duty)	50	60	75	100	125	150	200	250	300	350	400	450
FLA @ 2.5 kHz	65	77	96	124	156	180	240	302	361	414	477	534
Enclosure Options												
NEMA 1 Cabinet Ventilated	1755	1755	2083	2083	2083	2625	2625	2625	4280	4280	4280	4280
NEMA 12 Cabinet Ventilated	2164	2164	2480	2480	2480	3224	3224	3224				
NEMA 12 Cabinet with A/C	4392	4392	4968	4968	4968	6560	6560	6560				
NEMA 4 Cabinet with A/C	5508	5508	6318	6318	6318	8640	8640	8640				
NEMA 4X Cabinet with A/C	7209	7209	7938	7938	7938	10080	10080	10080				
NEMA 3R Rainproof	2902	2902	3881	3881	3881	5725	5725	5725				
Input Protection & Disconnect Options												
Input Fuses Only	317	317	550	550	550	550	900	900				
Fused Disconnect Switch & Rotary Handle	1208	1208	1485	1485	1485	1485	1680	1680				
Circuit Breaker Only	1100	1100	1100	1400	1400	1400	1800	1800	7420	7420	7420	7420
Circuit Breaker Disconnect & Rotary Handle	1310	1310	1310	1625	1625	1625	2000	2000	7770	7770	7770	7770
Door Mounted Operator Devices												
Door Mounted OIM (Remote Keypad)	75	75	75	75	75	75	75	75				
Maintained Start/Stop Switch	105	105	105	105	105	105	105	105				
Momentary Start/Stop Push Buttons	180	180	180	180	180	180	180	180				
E-Stop Push Button (Mushroom Head)	120	120	120	120	120	120	120	120				
Jog Push Button	90	90	90	90	90	90	90	90				
2 or 3 Position Selection Switch	90	90	90	90	90	90	90	90				
Pilot Light(1)	85	85	85	85	85	85	85	85				
Manual Potentiometer	120	120	120	120	120	120	120	120				
Contactors, Overloads, Starters, Control Transformers & Line Reactors												
Input Contactor(1)	450	450	800	800	1050	1050	1050	2500				
Output Contactor(1)	450	450	800	800	1050	1050	1050	2500				
Drive Bypass Control(1)	1400	1400	2100	2100	2600	2600	2600	5500	20690	25050	25050	28485
Motor Overload Relay	310	310	420	420	420	550	550	550				
Blower Motor Starter(1,4)	180	220	220	220	220	220	220	220				
Control Transformer: 460:120 VAC, 250VA (2)	275	275	275	275	275	275	275	275				
3% Impedance Input Line or Load Reactor												
Other peripheral equipment												
Space Heater (100W)	120	120	120	120	120	120	120	120				
Analog Input or output Isolator	980	980	980	980	980	980	980	980				
Shunt Trip device	280	280	280	280	280	280	280	280				
Undervoltage Release Device	355	355	355	355	355	355	355	355				
RFI/EMI filter	1170	1170	4590	4590	4590	8290	8290	13350				
DC Power Supply	210	210	210	210	210	210	210	210				
MOV surge protection	100	100	100	100	100	100	100	100				
Input IEEE 519-1992 Harmonic Filter	7920	9910	9940	12190	15420	17460	19320	26080				
Dynamic Braking - Transistor + Resistor												
1200W resistors	849	849	849	849	849	849	849	849				
2400W resistors	1299	1299	1299	1299	1299	1299	1299	1299				
4800W resistors	2107	2107	2107	2107	2107	2107	2107	2107				
4800W resistors	2107	2107	2107	2107	2107	2107	2107	2107				

(1) Requires Control Transformer option
(2) Add $100 for each 100VA over 250VA
(3) Add $100 for each 100W over the first 100W
(4) Required on TEBC motors

The bypass option includes:
- bypass contactor - reduced voltage starter (digital soft start) - additional bay (for bypass contactor, digital soft start, and wiring)

BALDOR

VS1GV Packaged Drives

480 VAC Base Drive Model Number											
Vector	**VS1GV 51-1B**	**VS1GV 52-1B**	**VS1GV 53-1B**	**VS1GV 55-1B**	**VS1GV 57-1B**	**VS1GV 510-1B**	**VS1GV 515-1B**	**VS1GV 520-1B**	**VS1GV 525-1B**	**VS1GV 530-1B**	**VS1GV 540-1B**
Base Drive List	1915	1989	2075	2340	2690	3055	3830	4469	5638	6596	8298
HP Rating (110% Overload, Normal Duty)	2	3	5	7.5	10	10	20	25	30	40	50
HP Rating (150% Overload, Heavy Duty)	1	2	3	5	7.5	10	15	20	25	30	40
FLA (Heavy Duty)	1.7	2.7	3.9	6.1	9	11	17	22	27	32	41
Base Drive List	2106	2188	2282	2574	2959	3361	4213	4915	6202	7255	9128
Enclosure Options											
NEMA 1 Cabinet Ventilated	1147	1147	1147	1147	1147	1147	1147	1678	1678	1678	1678
NEMA 12 Cabinet Ventilated	1193	1193	1193	1193	1193	1492	1492	1743	1743	1743	1743
NEMA 12 Cabinet with A/C	2457	2457	2457	2457	2457	3870	3870	4680	4680	4680	4680
NEMA 4 Cabinet with A/C	3690	3690	3690	3690	3690	3888	3888	4536	4536	4536	4536
NEMA 4X Cabinet with A/C	3978	3978	3978	3978	3978	4779	4779	6156	6156	6156	6156
NEMA 3R Rainproof	1519	1519	1519	1519	1519	1777	1777	1890	1890	1890	1890
Input Protection & Disconnect Options											
Input Fuses Only	158	158	158	158	158	178	178	245	317	317	611
Fused Disconnect Switch & Rotary Handle	403	403	403	403	403	438	438	505	757	757	1208
Circuit Breaker Only	600	752	752	752	752	865	865	865	865	865	911
Circuit Breaker Disconnect & Rotary Handle	1018	1018	1018	1018	1018	1131	1131	1131	1131	1131	1177
Door Mounted Operator Devices											
Door Mounted OIM (Remote Keypad)	75	75	75	75	75	75	75	75	75	75	75
Maintained Start/Stop Switch	105	105	105	105	105	105	105	105	105	105	105
Momentary Start/Stop Push Buttons	180	180	180	180	180	180	180	180	180	180	180
E-Stop Push Button (Mushroom Head)	120	120	120	120	120	120	120	120	120	120	120
Jog Push Button	90	90	90	90	90	90	90	90	90	90	90
2 or 3 Position Selection Switch	90	90	90	90	90	90	90	90	90	90	90
Pilot Light(1)	85	85	85	85	85	85	85	85	85	85	85
Manual Potentiometer	120	120	120	120	120	120	120	120	120	120	120
Contactors, Overloads, Starters, Control Transformers & Line Reactors											
Input Contactor(1)	220	220	220	220	220	220	220	220	220	450	450
Output Contactor(1)	220	220	220	220	220	220	220	220	220	450	450
Drive Bypass Control(1)	1160	1160	1160	1160	1160	1160	1160	1160	1160	1850	1850
Motor Overload Relay	200	200	200	200	200	200	200	250	250	250	310
Blower Motor Starter(1,4)	120	120	120	120	180	180	180	180	180	180	180
Control Transformer: 460:120 VAC, 250VA (2)	275	275	275	275	275	275	275	275	275	275	275
3% Impedance Input Line or Load Reactor	273	273	424	362	478	499	522	823	823	875	704
Other peripheral equipment											
Space Heater (100W)	120	120	120	120	120	120	120	120	120	120	120
Analog Input or output Isolator	980	980	980	980	980	980	980	980	980	980	980
Shunt Trip device	280	280	280	280	280	280	280	280	280	280	280
Undervoltage Release Device	355	355	355	355	355	355	355	355	355	355	355
RFI/EMI filter	590	590	590	590	590	590	810	810	810	980	980
DC Power Supply	210	210	210	210	210	210	210	210	210	210	210
MOV surge protection	100	100	100	100	100	100	100	100	100	100	100
Input IEEE 519-1992 Harmonic Filter	4420	4420	4420	4420	4420	4420	4580	7290	7290	10090	10300
Dynamic Braking - Transistor + Resistor											
1200W resistors	849	849	849	849	849	849	849	849	849	849	849
2400W resistors	1299	1299	1299	1299	1299	1299	1299	1299	1299	1299	1299
4800W resistors	2107	2107	2107	2107	2107	2107	2107	2107	2107	2107	2107
4800W resistors	2107	2107	2107	2107	2107	2107	2107	2107	2107	2107	2107

(1) Requires Control Transformer option
(2) Add $100 for each 100VA over 250VA
(3) Add $100 for each 100W over the first 100W
(4) Required on TEBC motors

VS1GV Packaged Drives

600 VAC Base Drive Model Number								
Vector	**VS1GV 550-1B**	**VS1GV 560-1B**	**VS1GV 575-1B**	**VS1GV 5100-1B**	**VS1GV 5125-1B**	**VS1GV 5150-1T**	**VS1GV 5200-1T**	**VS1GV 5250-1T**
Base Drive List	10766	11585	13574	15681	16617	19950	26600	33250
HP Rating (110% Overload, Normal Duty)	60	75	100	125	150	200	250	300
HP Rating (150% Overload, Heavy Duty)	50	60	75	100	125	150	200	250
FLA (Heavy Duty)	52	62	77	99	125	144	192	242
Enclosure Options								
NEMA 1 Cabinet Ventilated	1755	1755	2083	2083	2083	2625	2625	2625
NEMA 12 Cabinet Ventilated	2164	2164	2480	2480	2480	3224	3224	3224
NEMA 12 Cabinet with A/C	4392	4392	4968	4968	4968	6560	6560	6560
NEMA 4 Cabinet with A/C	5508	5508	6318	6318	6318	8640	8640	8640
NEMA 4X Cabinet with A/C	7209	7209	7938	7938	7938	10080	10080	10080
NEMA 3R Rainproof	2902	2902	3881	3881	3881	5725	5725	5725
Input Protection & Disconnect Options								
Input Fuses Only	317	317	550	550	550	550	900	900
Fused Disconnect Switch & Rotary Handle	1208	1208	1485	1485	1485	1485	1680	1680
Circuit Breaker Only	1100	1100	1100	1400	1400	1400	1800	1800
Circuit Breaker Disconnect & Rotary Handle	1310	1310	1310	1625	1625	1625	2000	2000
Door Mounted Operator Devices								
Door Mounted OIM (Remote Keypad)	75	75	75	75	75	75	75	75
Maintained Start/Stop Switch	105	105	105	105	105	105	105	105
Momentary Start/Stop Push Buttons	180	180	180	180	180	180	180	180
E-Stop Push Button (Mushroom Head)	120	120	120	120	120	120	120	120
Jog Push Button	90	90	90	90	90	90	90	90
2 or 3 Position Selection Switch	90	90	90	90	90	90	90	90
Pilot Light(1)	85	85	85	85	85	85	85	85
Manual Potentiometer	120	120	120	120	120	120	120	120
Contactors, Overloads, Starters, Control Transformers & Line Reactors								
Input Contactor(1)	450	450	800	800	1050	1050	1050	2500
Output Contactor(1)	450	450	800	800	1050	1050	1050	2500
Drive Bypass Control(1)	1400	1400	2100	2100	2600	2600	2600	5500
Motor Overload Relay	310	310	420	420	420	550	550	550
Blower Motor Starter(1,4)	180	220	220	220	220	220	220	220
Control Transformer: 460:120 VAC, 250VA (2)	275	275	275	275	275	275	275	275
3% Impedance Input Line or Load Reactor								
Other peripheral equipment								
Space Heater (100W)	120	120	120	120	120	120	120	120
Analog Input or output Isolator	980	980	980	980	980	980	980	980
Shunt Trip device	280	280	280	280	280	280	280	280
Undervoltage Release Device	355	355	355	355	355	355	355	355
RFI/EMI filter	1170	1170	4590	4590	4590	8290	8290	13350
DC Power Supply	210	210	210	210	210	210	210	210
MOV surge protection	100	100	100	100	100	100	100	100
Input IEEE 519-1992 Harmonic Filter	7920	9910	9940	12190	15420	17460	19320	26080
Dynamic Braking - Transistor + Resistor								
1200W resistors	849	849	849	849	849	849	849	849
2400W resistors	1299	1299	1299	1299	1299	1299	1299	1299
4800W resistors	2107	2107	2107	2107	2107	2107	2107	2107
4800W resistors	2107	2107	2107	2107	2107	2107	2107	2107

(1) Requires Control Transformer option
(2) Add $100 for each 100VA over 250VA
(3) Add $100 for each 100W over the first 100W
(4) Required on TEBC motors

BALDOR

VS1SD Servo Drive

3.2 thru 6.8A	**115/230 VAC**	**1 Phase - 50/60 Hz**
3.2 thru 130A	**230 VAC**	**3 Phase - 50/60 Hz**
3.4 thru 124A	**460 VAC**	**3 Phase - 50/60 Hz**

Applications: Constant torque or constant horsepower applications. New installations, replacements and original equipment manufacturers (OEM).

Features: NEMA 1 and NEMA 4 enclosure. Output frequency 0 to 500 Hz with peak overload capacity of 200% (175% frames C and D). Digital velocity or torque control. Built-in two and three input PID process control loop. Automatic tuning to motor and full rated torque down to zero speed.

Input Ratings	Voltage	115	230	230	460
	Voltage Range	95-130	180-264	180-264	340-528
	Phase	Single Phase		Three Phase (single phase with derating)	
	Frequency	50/60Hz ± 5%			
	Impedance	1% minimum from mains connection (3% for AA Frame drives)			
Output Ratings	Amps	3.2 - 6.8A @ 115/230VAC, 1PH; 3.2 - 130A @ 230VAC, 3PH; 3.4 - 124A @ 460VAC, 3PH			
	Overload Capacity	200% Peak (175% frames C and D); 150% for 1 minute			
	Frequency	0-500Hz			
	Voltage	0 to maximum input voltage (RMS) (Note: 0 to 230 V for 115 V Single Phase Units)			
Protective Features	Trip	Missing control power, over current, over voltage, under voltage, over temperature (motor or control), output shorted or grounded, motor overload, encoder loss.			
	Stall Prevention	Over voltage suppression, overcurrent suppression			
	External Output	LED trip condition indicators, 4 assignable logic outputs, 2 assignable analog outputs			
	Short Circuit	Phase to phase, phase to ground			
	Electronic Motor Overload	Meets UL508C (I^2T)			
Environmental Conditions	Temperature	-10 to 45°C. Derate 3% per °C to maximum ambient temperature of 55°C.			
	Cooling	Forced air			
	Enclosure	NEMA 1 (all ratings) NEMA 4X (3.2 to 15.2 Amps, Indoor use only)			
	Altitude	Sea level to 3300 Feet (1000 Meters) Derate 2% per 1000 Feet (303 Meters) above 3300 Feet			
	Humidity	NEMA 1: 10 to 90% RH Non-Condensing NEMA 4X: To 100% RH Condensing			
	Shock / Vibration	1G / 0.5G at 10Hz to 60Hz			
	Storage Temperature	-10 to +65°C			
Keypad Display	Display	LCD Graphical 128x64 Pixel			
	Keys	14 key membrane with tactile feedback			
	Functions	Output status monitoring, Digital speed control, Parameter setting and display, Diagnostic and Fault log display, Motor run and jog, Local/Remote toggle, One-step tuning			
	LED Indicators	Forward run command, Reverse run command, Stop command, Jog active			
	Remote Mount	200 feet (60.6m) maximum from control, NEMA 4 Indoor Rated			
	Trip	Separate message and trace log for each trip, last 10 trips retained in memory			
Control Specifications	Control Method	Microprocessor controlled PWM output, Servo closed loop			
	PWM Frequency	Adjustable 1.5-5kHz STD, 5-16 kHz quiet			
	Frequency Setting	±5 VDC, 0-5 VDC ±10 VDC, 0-10 VDC, 4-20 mA or 0-20 mA; digital (keypad), Serial Comms/USB 2.0, and Modbus RTU standard			
	Accel/Decel	0-3600 seconds			
	Brake Internal Resistor	20% Duty Cycle standard on Sizes AA and B, 1% Duty Cycle standard on Size C, D			
	Motor Matching	Automatic tuning to motor with manual override			
	PC Setup Software	MINT® WorkBench Software available using the USB 2.0 port for commissioning wizard, firmware download, parameter viewer, scope capture and cloning			
	Maximum Output Frequency	500 Hz			
	Selectable Operating Modes	Keypad, Standard Run 2-Wire, Standard Run 3-Wire, 15 Preset Speeds, Fan Pump 2-Wire, Fan Pump 3-Wire, Process Control, 3-SPD ANA 2-Wire, 3-SPD ANA 3-Wire, Electronic Pot 2-Wire, Electronic Pot 3-Wire, Network, Profile Run, Bipolar, PLC, Pulse Follower			
Motor Feedback	Feedback Type	Resolver coupled to motor shaft			
	Sine/Cosine Inputs	4.2 VRMS ± 10% (maximum coupled)			
	Excitation (V Reference)	8.4 VRMS @ 10 kHz			
	Transformation Ratio	0.5 only			
	Positioning	Output for position loop controller, simulated encoder 1024 PPR Quadrature w/index			
Analog Inputs	One Differential	±5VDC, ±10VDC, 4-20 mA and 0-20 mA, 11-bit + sign			
	One Single Ended	0 - 10 VDC, 11-bit			
	Input Impedance	80 kOhms (Volt mode); 500 Ohms (Current mode)			
Analog Outputs	Analog Outputs	2 Assignable			
	Full Scale Range	AOUT1 (0-5V, 0-10V, 0-20mA or 4-20mA), AOUT2 (+5V, +10V)			
	Source Current	1 mA maximum (volt mode), 20mA (current mode)			
	Resolution	9 bits			
Digital Inputs	Opto-isolated Inputs	8 Assignable, 1 dedicated input (Drive Enable)			
	Rated Voltage	10 - 30 VDC (active low std., active high with jumper change)			
	Input Impedance	4.71 kOhms			
	Leakage Current	10 µA maximum			
	Update Rate	16 msec			
Digital Outputs (2 Opto Outputs)	Rated Voltage	5 to 30VDC			
	Maximum Current	60 mA Maximum			
	ON Voltage Drop	2 VDC Maximum			
	OFF Leakage Current	0.1 mA Maximum			
	Output Conditions	31 Selectable Conditions			
Digital Outputs (2 Relay Outputs)	Rated Voltage	5 to 30VDC or 240VAC			
	Maximum Current	5A Maximum non-inductive			
	Output Conditions	31 Selectable Conditions			

VS1SD Servo Drive

	Catalog Number	Size	Quiet 8.0 kHz PWM Output Current Cont.	Quiet 8.0 kHz PWM Output Current Peak	Standard 2.5 kHz PWM Output Current Cont.	Standard 2.5 kHz PWM Output Current Peak	List Price	Mult. Sym.
	NEMA 1 Enclosure							
	115/230 Volts - Single Phase Input							
	VS1SD6A3-1B	AA	3.2	6.4	4.2	7.4	1,583	EC
	VS1SD6A4-1B	AA	4.2	8.4	6.8	11.9	1,775	EC
	VS1SD6A7-1B	AA	6.8	13.6	9.6	16.8	2,049	EC
	230 Volts - Three Phase Input							
◊	VS1SD2A3-1B	AA	3.2	6.4	4.2	7.4	1,439	EC
◊	VS1SD2A4-1B	AA	4.2	8.4	6.8	11.9	1,613	EC
◊	VS1SD2A7-1B	AA	6.8	13.6	9.6	16.8	1,862	EC
◊	VS1SD2A10-1B	AA	9.6	19.2	15.2	26.6	2,079	EC
◊	VS1SD2A15-1B	AA	15.2	30.4	22	38.5	2,501	EC
◊	VS1SD2A22-1B	B	22	44	28	49	3,510	EC
◊	VS1SD2A28-1B	B	28	56	42	73.5	4,473	EC
◊	VS1SD2A42-1B	B	42	84	54	94.5	5,343	EC
◊	VS1SD2A54-1B	C	54	94.5	68	119	6,403	EC
◊	VS1SD2A68-1B	C	68	119	80	140	8,321	EC
◊	VS1SD2A80-1B	C	80	140	104	182	9,596	EC
◊	VS1SD2A104-1B	D	104	182	130	228	12,287	EC
◊	VS1SD2A130-1B	D	130	228	154	270	15,734	EC
	460 Volts - Three Phase Input							
◊	VS1SD4A3-1B	AA	3.4	6.8	4.8	8.4	2,502	EC
◊	VS1SD4A5-1B	AA	4.8	9.6	7.6	13.3	2,574	EC
◊	VS1SD4A8-1B	AA	7.6	15.2	11	19.3	2,959	EC
◊	VS1SD4A11-1B	AA	11	22	14	24.5	3,361	EC
◊	VS1SD4A14-1B	B	14	28	21	36.8	4,552	EC
◊	VS1SD4A21-1B	B	21	42	27	47.3	4,895	EC
◊	VS1SD4A27-1B	B	27	54	34	59.5	6,237	EC
◊	VS1SD4A34-1B	C	34	60	40	70	7,256	EC
◊	VS1SD4A40-1B	C	40	70	52	91	9,128	EC
◊	VS1SD4A65-1B	D	65	114	77	135	11,586	EC
◊	VS1SD4A77-1B	D	77	135	96	168	13,574	EC
◊	VS1SD4A96-1B	D	96	168	124	217	15,681	EC
◊	VS1SD4A124-1B	D	124	217	156	273	16,617	EC
	NEMA 4 Washdown Enclosure							
	115/230 Volts - Single Phase Input							
	VS1SD6A3-4B	AA	3.2	6.4	4.2	7.4	1,742	EC
	VS1SD6A4-4B	AA	4.2	8.4	6.8	11.9	1,953	EC
	VS1SD6A7-4B	AA	6.8	13.6	9.6	16.8	2,254	EC
	230 Volts - Three Phase Input							
	VS1SD2A3-4B	AA	3.2	6.4	4.2	7.4	1,583	EC
	VS1SD2A4-4B	AA	4.2	8.4	6.8	11.9	1,775	EC
	VS1SD2A7-4B	AA	6.8	13.6	9.6	16.8	2,049	EC
	VS1SD2A10-4B	AA	9.6	19.2	15.2	26.6	2,287	EC
	VS1SD2A15-4B	AA	15.2	30.4	22	38.5	2,752	EC
	460 Volts - Three Phase Input							
	VS1SD4A3-4B	AA	3.4	6.8	4.8	8.4	2,753	EC
	VS1SD4A5-4B	AA	4.8	9.6	7.6	13.3	3,366	EC
	VS1SD4A8-4B	AA	7.6	15.2	11	19.3	4,369	EC
	VS1SD4A11-4B	AA	11	22	14	24.5	4,387	EC

See pages 78-80 for dimensions and weights.
See pages 81-82 for optional equipment.
◊ Stock Model Numbers

BALDOR

VS1PM Permanent Magnet Drive

10 Hp **230 VAC** **3 Phase - 50/60 Hz**
7.5 thru 200 Hp **460 VAC** **3 Phase - 50/60 Hz**

Contact your Baldor District Office for additional ratings.

Applications: Constant or Variable Torque Applications. New installations and original equipment manufactures (OEM).

Features: Exclusively for use with our RPMAC Interior Permanent Magnet Motors. Very high efficiency motor/drive packages. NEMA 1 Enclosures. For use on Constant Torque and Variable Loads. Require Motor Speed Feedback. Output frequency 0 to 66Hz with peak overload capacity of 175%. Built-in two and three input PID process control loop. Automatically tuned to Baldor RPMAC Interior PM Motors. Uses same Graphic Keypad and Expansion Boards as the VS1SP/GV Families.

Input Ratings	Voltage		230	460
	Voltage Range		180-264	340-528
	Phase		Three Phase (single phase with derating)	
	Frequency	50/60Hz +5%		
	Impedance	1% minimum from mains connection		
Output Ratings	Horsepower	10 HP @ 230VAC, 3PH; 7.5-200 HP @ 460VAC, 3PH		
	Overload Capacity	Heavy Duty (Constant Torque) = 150% for 60 seconds, 175% for 3 seconds		
		Normal Duty (Variable Torque) = 115% for 60 seconds		
	Frequency	0-66Hz		
	Voltage	0 to maximum input voltage (RMS)		
Protective Features	Trip	Missing control power, over current, over voltage, under voltage, over temperature (motor or control), output shorted or grounded, motor overload, encoder loss.		
	Stall Prevention	Over voltage suppression, overcurrent suppression		
	External Output	LED trip condition indicators, 4 assignable logic outputs, 2 assignable analog outputs		
	Short Circuit	Phase to phase, phase to ground		
	Electronic Motor Overload	Meets UL508C (I2T)		
Environmental Conditions	Temperature	10 to 45°C. Derate 3% per °C to maximum ambient temperature of 55°C.		
	Cooling	Forced air		
	Enclosure	NEMA 1 (-1B)		
	Altitude	Sea level to 3300 Feet (1000 Meters) Derate 2% per 1000 Feet (303 Meters) above 3300 Feet		
	Humidity	NEMA 1: 10 to 90% RH Non-Condensing		
	Shock / Vibration	1G / 0.5G at 10Hz to 60Hz		
	Storage Temperature	-10 to +65°C		
Keypad Display	Display	LCD Graphical 128x64 Pixel		
	Keys	14 key membrane with tactile feedback		
	Functions	Output status monitoring, Digital speed control, Parameter setting and display, Diagnostic and Fault log display, Motor run and jog, Local/ Remote toggle, One-step tuning		
	LED Indicators	Forward run command, Reverse run command, Stop command, Jog active		
	Remote Mount	200 feet (60.6m) maximum from control, NEMA 4 Rated		
	Trip	Separate message and trace log for each trip, last 10 trips retained in memory		
Control Specifications	Control Method	Microprocessor controlled PWM output, selectable closed loop vector, encoderless vector or V/Hz inverter		
	PWM Frequency	Adjustable 1.5-5kHz STD, 5-16 kHz quiet		
	Frequency Setting	±5 VDC, 0-5 VDC ±10 VDC, 0-10 VDC, 4-20 mA or 0-20 mA; digital (keypad), Serial Comms/USB 2.0, and Modbus RTU standard		
	Accel/Decel	0-3600 seconds		
	Brake Torque	20% standard on Sizes AA and B, 1% standard on Size C, D		
	Motor Matching	Automatic tuning to motor with manual override		
	PC Setup Software	Mint WorkBench Software available using the USB 2.0 port for commissioning wizard, firmware download, parameter viewer, scope capture and cloning		
	Maximum Output Frequency	500 Hz		
	Selectable Operating Modes	Keypad, Standard Run, 2-Wire, Standard Run 3-Wire, 15 Preset Speeds, Fan Pump 2-Wire, Fan Pump 3-Wire, Process Control, 3-SPD ANA 2-Wire, 3-SPD ANA 3-Wire, Electronic Pot 2-Wire, Electronic Pot 3-Wire, Network Profile Run, Bipolar		
Motor Feedback	Feedback Type	Resolver Feedback (Std.); Optional Incremental Encoder Feedback for VT Loads.		
	Sine/Cosine Inputs	4.2VRMS +/- 10% (maximum coupled)		
	Excitation (V Reference)	8.4VRMS @10kHz		
	Transformation Ratio	0.5 Only		
	Positioning	Output for position loop controller, simulated encoder 1024 PPR Quadrature with index		
Analog Inputs	One Differential	±5VDC, ±10VDC, 4-20 mA and 0-20 mA, 11-bit + sign		
	One Single Ended	0 - 10 VDC, 11-bit		
	Input Impedance	80 kOhms (Volt mode); 500 Ohms (Current mode)		
Analog Outputs	Analog Outputs	2 Assignable		
	Full Scale Range	AOUT1 (0-5V, 0-10V, 0-20mA or 4-20mA), AOUT2 (+5V, +10V)		
	Source Current	1 mA maximum (volt mode), 20mA (current mode)		
	Resolution	9 bits		
Digital Inputs	Opto-isolated Inputs	8 Assignable, 1 dedicated input (Drive Enable)		
	Rated Voltage	10 - 30 VDC (closed contacts std)		
	Input Impedance	4.71 k Ohms		
	Leakage Current	10 mA maximum		
	Update Rate	16 msec		
Digital Outputs (2 Opto Outputs)	Rated Voltage	5 to 30VDC		
	Maximum Current	60 mA Maximum		
	ON Voltage Drop	2 VDC Maximum		
	OFF Leakage Current	0.1 mA Maximum		
	Output Conditions	25 Conditions		
Digital Outputs (2 Relay Outputs)	Rated Voltage	5 to 30VDC or 240VAC		
	Maximum Current	5A Maximum non-inductive		
	Output Conditions	25 Conditions		
	Maximum Current	5A Maximum non-inductive		
	Output Conditions	31 Selectable Conditions		

VS1PM Permanent Magnet Drive

Catalog Number	Size	Heavy Duty				Normal Duty				List Price	Mult. Sym.
		Hp	kW	Cont. Amps	Peak Amps	Hp	kW	Cont. Amps	Peak Amps		
230 Volts - Single Phase Input											
VS1PM210-1B	B	10	7.5	28	49	15	11	42	52.5	3,138	EC
460 Volts - Three Phase Input											
VS1PM47-1B	AA	7.5	5.6	11	19.3	7.5	5.6	11	13.8	2,690	EC
◊ **VS1PM410-1B**	AA	10	7.5	14	24.5	10	7.5	14	17.5	3,055	EC
◊ **VS1PM415-1B**	B	15	11	21	36.75	20	15	27	33.75	3,830	EC
◊ **VS1PM420-1B**	B	20	15	27	47.25	25	18.7	34	42.5	4,469	EC
◊ **VS1PM425-1B**	B	25	18.7	34	60	30	22	40	50	5,638	EC
◊ **VS1PM430-1B**	C	30	22.4	40	70	40	29.8	52	60	6,596	EC
◊ **VS1PM440-1B**	C	40	29.8	52	91	50	37.3	65	75	8,298	EC
◊ **VS1PM450-1B**	C	50	37.3	65	114	60	44.8	77	89	9,787	EC
◊ **VS1PM460-1B**	D	60	45	77	135	75	56	96	110	10,532	EC
◊ **VS1PM475-1B**	D	75	56	96	168	100	75	124	143	12,340	EC
◊ **VS1PM4100-1B**	D	100	75	124	217	125	93	156	179	14,255	EC
◊ **VS1PM4125-1B**	D	125	93	156	273	150	112	180	207	15,106	EC
◊ **VS1PM4150-1T***	E	150	112	180	315	200	149	240	276	18,150	EC

Note: Baldor has the capability of providing VS1PM4200-1T through VS1PM4450-1T drives for applications up to 450 Hp Heavy Duty / 500 Hp Normal Duty. Contact Baldor for more information.

See pages 78-80 for dimensions and weights.
See pages 81-82 for optional equipment.

* VS1GV E-Frame Drives include an internal dynamic braking transistor only.
An integral braking resistor is not included. If braking is required, an external resistor must be provided.

◊ Stock Model Numbers

BALDOR

VS1SP / VS1GV / VS1SD / VS1PM Drive Dimensions and Weights

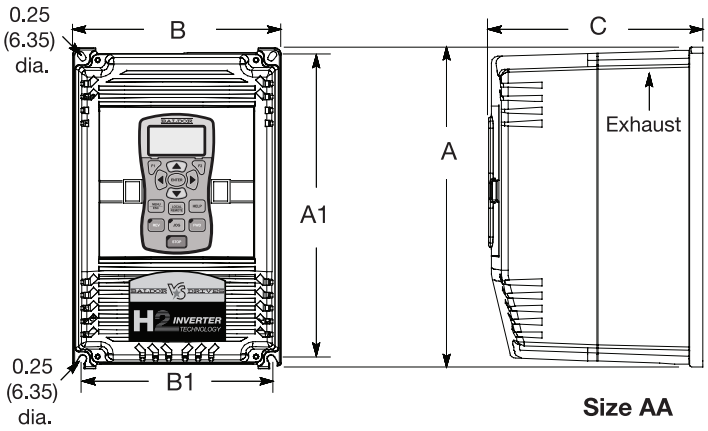

Size AA

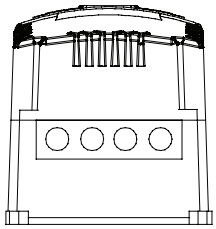

CONDUIT INFORMATION		
Size	# Holes	Diameter inches (mm)
AA	4	0.87 (22)

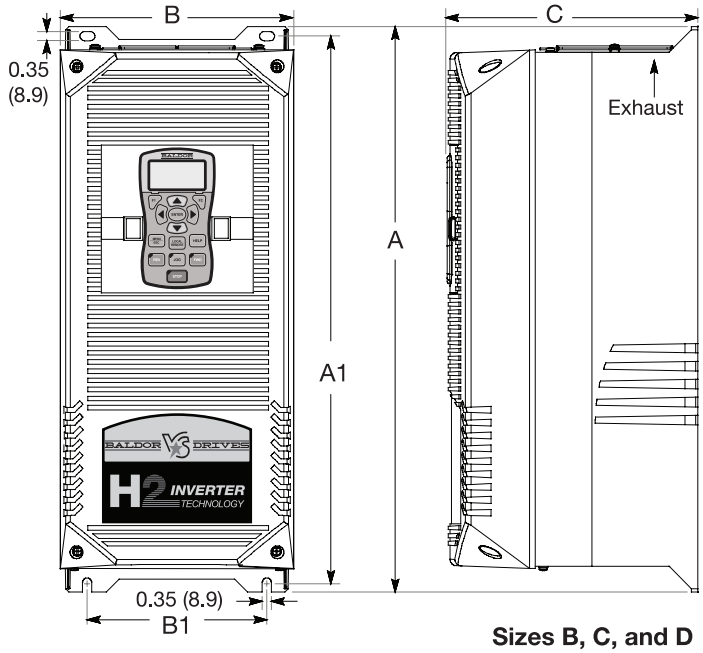

Sizes B, C, and D

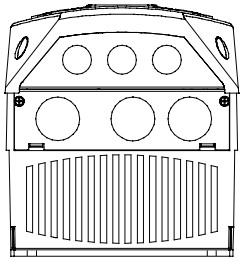

CONDUIT INFORMATION		
Size	# Holes	Diameter inches (mm)
B	3	1.115 (28.3)
	3	1.362 (34.6)
C	3	1.115 (28.3)
	3	1.680 (42.0)
D	3	1.115 (28.3)
	2	2.470 (62.7)
	1	1.362 (34.6)
	1	0.500 (12.7)
E	3	1.115 (28.3)
	2	4.000 (102)
	1	1.680 (43.0)
	1	0.500 (23.7)
F	Gland Plate Provided (Bottom Entry)	

Size	Dimensions inches (mm)					Weight
	Outside			Mounting		
	Height (A)	Width (B)	Depth (C)	Height (A1)	Width (B1)	lb (kg)
AA	12.27 (311)	7.97 (202)	8.21 (208)	11.75 (298)	7.38 (187)	20 (9.1)
B	18.00 (457)	9.10 (231)	9.75 (248)	17.25 (438)	7.00 (178)	30 (13.6)
C	22.00 (559)	9.10 (231)	9.75 (248)	21.25 (540)	7.00 (178)	60 (27.2)
D	28.00 (711)	11.50 (292)	13.00 (330)	27.25 (692)	9.50 (241)	120 (54.4)
E	42.81 (1087)	18.75 (476)	16.05 (407)	39.75 (1010)	15.75 (400)	250 (113.4)
F**	86.56 (2199)	31.78 (807)	24.59 (625)	FLOOR MOUNT		915 (415)*

Notes: *300 Hp Frame Size F drives weigh 825 lbs. (374kg); all other models are 915 lbs. (415kg).
**Frame Size F drives are supplied as standard for bottom entry of conduits. Top entry styles are available in a wider cabinet.

VS1SP / VS1GV / VS1SD / VS1PM Drive Dimensions and Weights

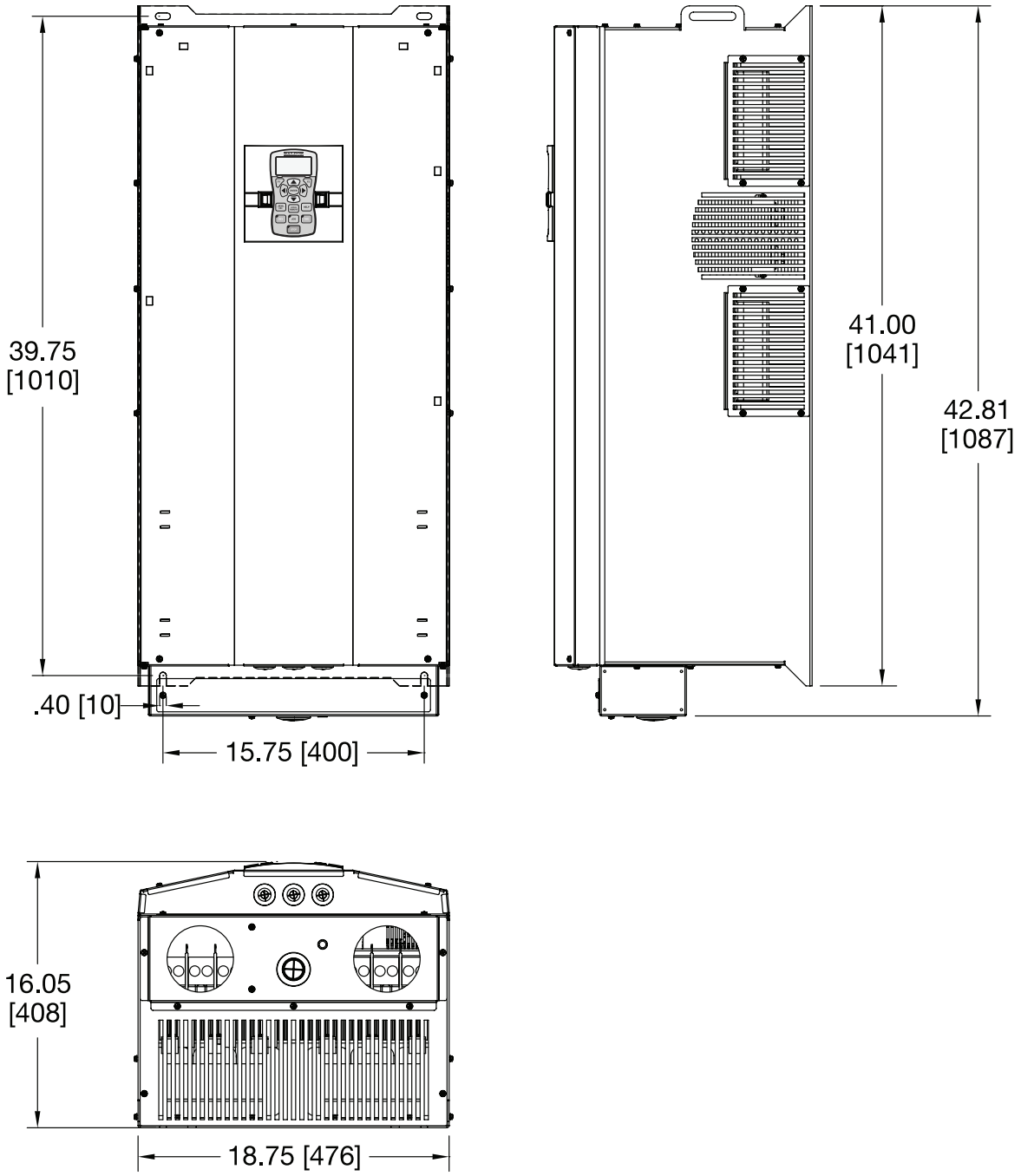

Size E

BALDOR

VS1SP / VS1GV / VS1SD / VS1PM Drive Dimensions and Weights

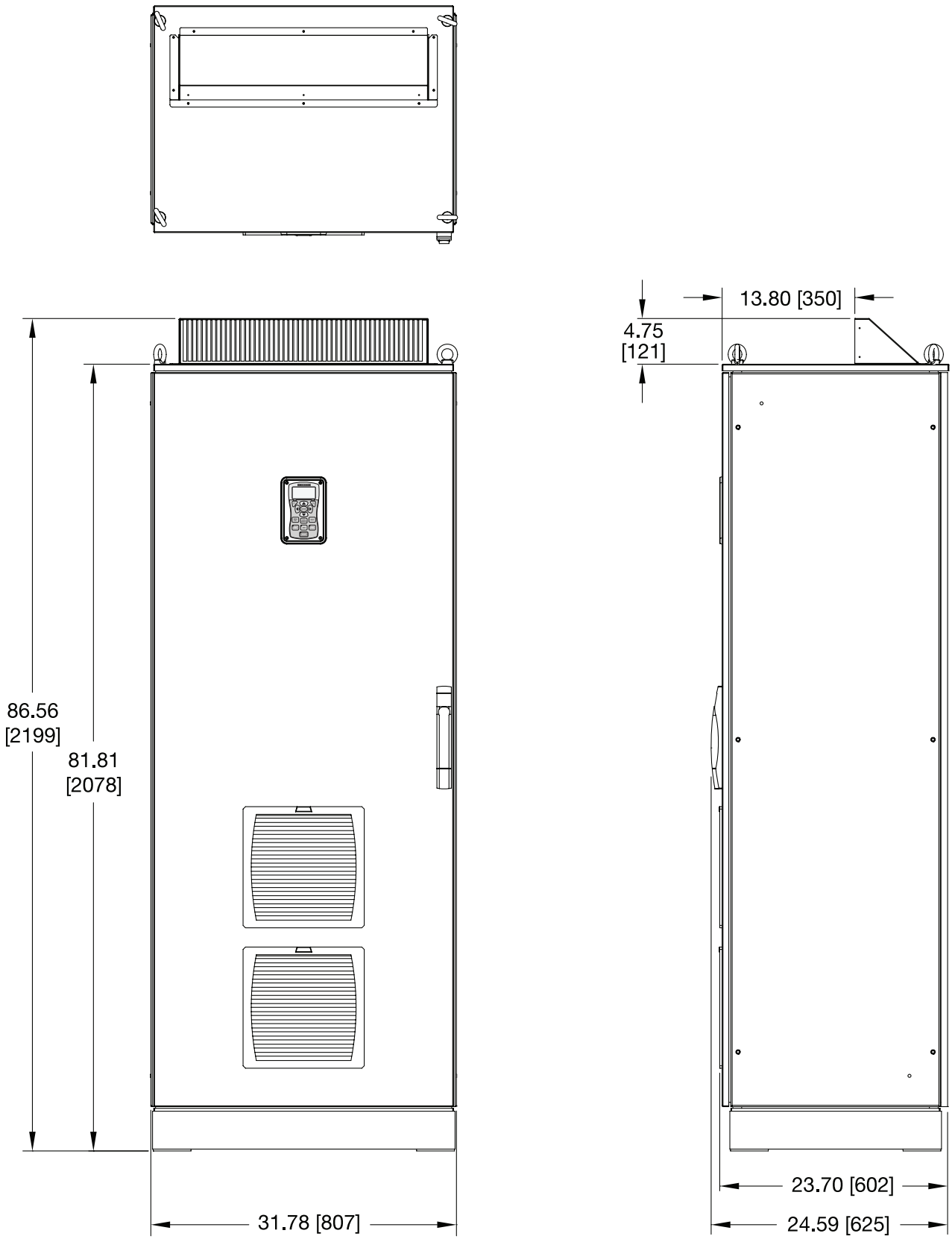

Size F

VS1SP / VS1GV / VS1SD / VS1PM Keypad Extension Cable

For the convenience of our customers, we offer a connector plug/cable assembly.
This assembly provides the connection from the keypad to the control for remote keypad operation.

Catalog Number	Cable Extension Length	List Price	Mult. Sym.	Approx. Shpg. Wgt.
◊ CBLHH015KP	5 feet (1.5 meter)	44	EC	1
◊ CBLHH030KP	10 feet (3.0 meter)	64	EC	1
◊ CBLHH046KP	15 feet (4.6 meter)	83	EC	1
◊ CBLHH061KP	20 feet (6.1 meter)	102	EC	2
◊ CBLHH091KP	30 feet (9.1 meter)	120	EC	3
◊ CBLHH152KP	50 feet (15.2 meter)	171	EC	3
◊ CBLHH229KP	75 feet (22.9 meter)	247	EC	4
◊ CBLHH305KP	100 feet (30.5 meter)	323	EC	5
◊ CBLHH457KP	150 feet (45.7 meter)	452	EC	6
◊ CBLHH610KP	200 feet (61.0 meter)	578	EC	7

◊ Stock Model Numbers

VS1SP / VS1GV / VS1SD / VS1PM Dynamic Braking Resistor Assemblies

Dynamic Braking Resistor Assemblies include braking resistors completely assembled and mounted into a NEMA 1 enclosure. Select the braking resistor that has correct ohm value for the control and adequate continuous watts capacity to meet load requirements.

Input Volts	Hp	Total Ohms	Continuous Rated Watts						
			600	1200	2400	4800	6400	9600	14200
230	1 - 7.5	20	◊ RGA620	◊ RGA1220	◊ RGA2420	—	—	—	—
	10 - 20	6	—	◊ RGA1206	◊ RGA2406	◊ RGA4806	—	—	—
	25 - 40	4	—	◊ RGA1204	◊ RGA2404	◊ RGA4804	—	—	—
	50 - 60	2	—	—	—	◊ RGA4802	◊ RGA6402	◊ RGA9602	◊ RGA14202
460	1 - 3	120	◊ RGA6120	◊ RGA12120	◊ RGA24120	—	—	—	—
	5 - 10	60	◊ RGA660	◊ RGA1260	◊ RGA2460	◊ RGA4860	—	—	—
	15 - 25	20	◊ RGA620	◊ RGA1220	◊ RGA2420	◊ RGA4820	—	—	—
	30 - 50	10	—	◊ RGA1210	◊ RGA2410	◊ RGA4810	—	—	—
	60 - 125	4	—	◊ RGA1204	◊ RGA2404	◊ RGA4804	◊ RGA6404	◊ RGA9604	◊ RGA14204
	150 - 450	2				◊ RGA4802	◊ RGA6402	◊ RGA9602	◊ RGA14202
600	1 - 3	120	◊ RGA6120	◊ RGA12120	◊ RGA24120	—	—	—	—
	5 - 10	60	◊ RGA660	◊ RGA1260	◊ RGA2460	◊ RGA4860	—	—	—
	15 - 25	30	◊ RGA630	◊ RGA1230	◊ RGA2430	◊ RGA4830	—	—	—
	30	24	—	◊ RGA1224	◊ RGA2424	◊ RGA4824	—	—	—
	40 - 125	14	—	—	—	◊ RGA4814	◊ RGA6414	—	—
		List Price	572	849	1,299	2,107	5,312	8,525	11,731
		Mult. Sym.	EC	EC	EC	EC	EC	EC	EC

Note: * Total Ohms column indicates the minimum resistance that the braking transistor can drive. For example, if the total ohms column indicates 6 ohms and a 6 ohm resistor is unavailable, an 8 ohm can be used but not a 4 ohm resistor.

BALDOR

VS1SP / VS1GV / VS1SD / VS1PM Expansion Boards

Baldor offers a wide variety of plug-in expansion boards for the VS1SP/VS1GV/VS1SD/VS1PM drives. Expansion boards allow the drive to be interfaced with various inputs and outputs. Each control has the capability to utilize up to two expansion boards.

Catalog Number	Description	List Price	Mult. Sym.
◊ **EXBHH001A01**	Ethernet Server Expansion Board Provides easy connection to all drive parameters for setup and review using any PC based Web Browser via an Ethernet connection. Download parameter values, operating conditions, and fault log data for review and archive. Uses standard RJ-45 female terminal for Ethernet connection.	163	EC
◊ **EXBHH003A01**	Isolated Input Expansion Board Contains 9 isolated inputs jumper configurable for 90-130 VAC. All inputs must be the same voltage – one side of all inputs is common. This board replaces all the opto inputs on the main control board. Uses screw terminals for connection.	211	EC
◊ **EXBHH005A01**	High Resolution Analog Input/Output Board Provides two additional analog inputs and two additional analog outputs with up to 16 bits resolution. Acceptable DC inputs: ± 10V, 0-10V, or ± 5V with 300 microvolt resolution. Current inputs: 0-20 mA or 4-20 mA with 0.6 micro amp resolution. Input / Resolution ± 10 V / 16 bit 0 - 10 V / 15 bit ± 5 V / 15 bit 0 - 5 V / 14 bit 0 - 20 mA / 15 bit 4 - 20 mA / 15 bit All inputs can be inverted through software.	330	EC
◊ **EXBHH007A01**	Master Pulse Reference/Isolated Pulse Follower Board 1. Accepts a 5V or 12V quadrature pulse train input or pulse and direction input to use as a master reference. 2. Re-transmits the input pulse train at 5Vdc for different ratios from 1:20 up to 65535:1 (Scaled output). 3. Can be used as a auxiliary encoder input to the control.	539	EC
◊ **EXBHH013A02**	DeviceNet / EtherNet/IP / Modbus - TCP Expansion Board Allows VS1GV, VS1SP, VS1SD and VS1PM Drives to be connected to a DeviceNet Communications Network, or an EtherNet/IP Communications Network, or a Modbus - TCP Communications Network. Uses plug-in terminals for connection to a DeviceNet Communications Network or an RJ-45 to connect to an EtherNet/IP or a Modbus - TCP Communications Network.	558	EC
◊ **EXBHH014A01**	PROFIBUS-DP Expansion Board Allows VS1GV, VS1SP and VS1PM Drives to be connected to a PROFIBUS Communications Network. Uses 9-pin D-shell for connection.	670	EC
◊ **EXBHH015A01**	BACnet Expansion Board Allows VS1GV, VS1SP, VS1SD and VS1PM Drives to be connected to a BACnet Communications Network. Uses screw terminals for connection.	575	EC
◊ **EXBHH016A01**	LonWorks Communications Expansion Board Allows VS1GV, VS1SP, VS1SD and VS1PM Drives to be connected to a LonWorks Communications Bus. Uses plug-in terminals for connection.	548	EC
◊ **EXBHH017A01**	Metasys N2 Communications Expansion Board allows VS1GV, VS1SP, VS1SD and VS1PM drives to be connected to an N2 Communications Network. Uses screw terminals for connection.	575	EC

◊ Stock Model Numbers

Baldor Cooling Tower Control System Overview

Improved System Reliability, System Efficiency and Reduced Noise

Improvements in system reliability, system efficiency and reduced noise are now possible with the introduction of new motor and drive technology applied to cooling tower applications. The same electric motor and control technology that is being used to power today's most sophisticated hybrid vehicles is now being adapted to run cooling tower applications. Advances in motor power density using laminated steel finned frame construction combined with high flux strength permanent magnet salient pole rotor technology results in a high torque, slow speed, low profile motor that is mounted directly to the fan and operates at variable speed to maximize system efficiency. Permanent Magnet Rotor (PMR) construction using high flux strength Neodymium Iron Boron (NdFeB) magnets allows the motor to be manufactured in a compact form factor. The same basic motor design requirements for a hybrid vehicle: high torque, efficient, low weight, reliable, quiet and highly compact apply to the cooling tower application as well.

Conventional Fan Drive

The most common solution for driving the fan in modern cooling towers utilizes an induction motor, driveshaft, disc couplings, guards, and gearbox arrangement as shown in Figure 1.

Typically this motor is a standard NEMA induction motor either EPAct or premium efficient. For improved system efficiency, two speed motors have been applied for use when full fan speed is not required due to decreased wet bulb temperatures. Two speed motors do provide some energy savings, but still must be cycled on and off to maintain the desired water temperature. This cycling involves many "across the line" starts drawing high amps and placing unnecessary strain on the mechanical and electrical components of the drive train system. While providing some flexibility in the tower control logic, two speed motors are not optimal when it comes to maximizing energy savings during times of reduced heat load on the system.

Figure 1: Gearbox mounted under fan

Historically, the mechanical components of the fan drive, specifically the right angle gearbox, have been the largest maintenance issue for cooling tower installations. Gearbox failures, oil leaks, failed drive shafts, misaligned drive shafts and excessive vibration are all significant problems related to this drive system.

Direct Drive Motor

The Baldor RPM AC Cooling Tower Direct Drive motor is a motor designed exclusively for the cooling tower industry. The RPM AC product is a very power dense industrial motor with proven reliability in the most demanding industrial applications including steel mill, paper mill and drill rig applications. The Cooling Tower version of this motor utilizes interior permanent magnet rotor technology and is designed to be mechanically interchangeable with many existing cooling tower gearbox designs. The fan mounts directly to the motor. This direct drive arrangement eliminates the entire gearbox and driveshaft torque transmission components.

The PM design is a synchronous machine that runs at precise speeds without slip in combination with a Baldor PM AC adjustable frequency drive which is also designed exclusively for the cooling tower applications.

In addition to being small and very compact this motor is also quiet and energy efficient (see Figure 2).

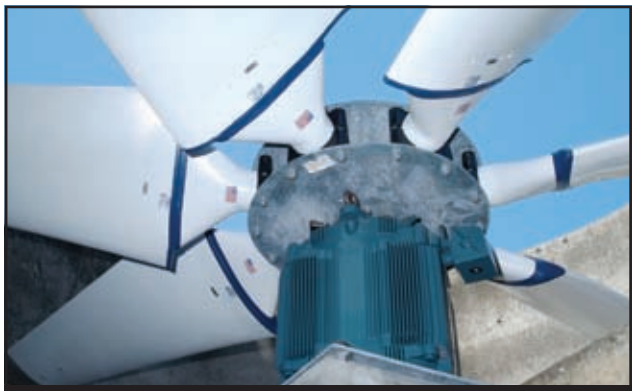

Figure 2: Fan mounted to Motor

BALDOR

Baldor Cooling Tower Control System Overview

Variable Frequency Control – Optimized Performance

By slowing down the motor in a Variable Torque load (such as a fan), considerable energy can be saved. The entire cooling tower system must be designed for the "Worst Case" (or highest air flow) scenario. Typically, a cooling tower fan can run considerably slower than nominal RPM rating of the motor.

As the speed of the motor is decreased, the air flow drops in a corresponding linear fashion. So, for example, if the motor runs at only 70% Speed, the air flow is correspondingly reduced to 70% of maximum air flow (see Figure 3 below).

The Input Power to the motor varies with the cube of the motor speed. For example, if a motor is run at half-speed, the power consumed by the motor is 1/8 [i.e. $(1/2)^3$]. So, if the needed airflow can be achieved by running at half-speed, it is possible to save a large amount of energy (see Figure 4 below).

Figure 3

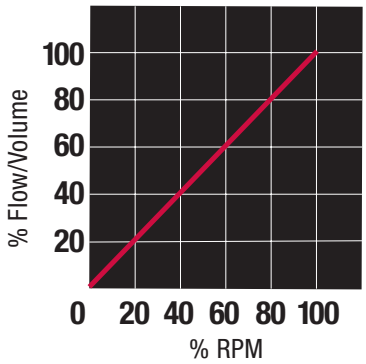

Figure 4

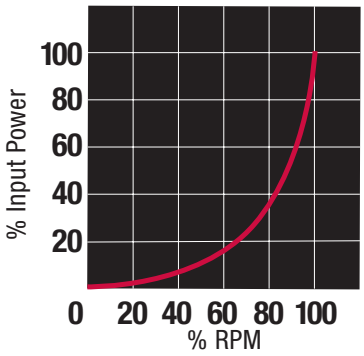

Baldor V*S Drives Permanent Magnet Control – Introducing the new VS1CTD Controls

Unlike a typical AC Induction Motor, a Permanent Magnet AC Motor cannot run across the line and requires a specially designed AC Drive for operation. To ease selection of the proper drive, Baldor has combined our new RPM AC Permanent Magnet Motors with our Baldor VS1CTD controls. These motor/drive packages are designed for Cooling Tower Applications and will function "out of the box" with very little tuning or commissioning required. Baldor Permanent Magnet Drive/Motor Packages provide high system efficiency performance. Baldor VS1CTD controls are easy to setup and operate due to the inclusion of a multi-language, graphic keypad. Setup screens lead you through the initial setup in plain English. Diagnostic messages keep you informed if anything is starting to go wrong and allow you to fix the problem before it gets out of hand. The Baldor VS1CTD keypad also has a Help Key. If you need help on a particular screen, simply press the Help Button for more information. Baldor VS1CTD controls support all the common HVAC Communication Interfaces for Monitoring and Control including BACnet, Johnson Controls Metasys-N2, LonWorks and MODBUS-RTU.

Maintenance Free, Easy Retrof t or New Installations

The RPM AC Direct Drive Cooling Tower Motor is designed with the user in mind. The motor is designed to be in the air stream with shaft sealing protection to keep out water and contamination. The special end brackets and overall length profile are designed to be a direct interchangeable with many existing gearbox designs.

Cost Effective

Compared to traditional fixed speed installations the cost of this V*S (Variable Speed) solution is very competitive. When combined with the eliminated maintenance costs and increased energy savings, the system will quickly pay for itself.

Features and Benef ts

- Increased system reliability, fewer components
- 5 year warranty
- Operation at optimal system efficiency point using variable speed control
- Energy efficient with high power factor for reduced energy consumption or increased cooling capacity at equivalent power consumption
- Reduced overall noise levels
- Easy retrofit

More Information

For more information on the availability and performance of the new RPM AC Direct Drive Cooling Tower motor and Baldor VS1CTD controls contact your local Baldor Electric sales office.

Baldor Cooling Tower Control System Overview

RPMAC Cooling Tower Specifications

Fan Reference Dia. (ft)	Motor Torque (lb ft)	Min. Required Air Velocity (ft/min)	Motor Base Speed (RPM)	Motor Hp at Base Speed	Motor Frame Size	Motor & Drive Catalog No.	Motor Full Load Amps	Approx. Motor Wgt. (lb)	*Motor Height "M" (in.)	Drive Max Amps	Drive Frame
6	95	500	550	10	FL2554	CTPM2501055D410	11	375	14.87	11.9	AA
10	140		375	10	FL2562	CTPM2501037D410	11	440	16.87	11.9	AA
10	210		375	15	FL2570	CTPM2501537D415	14	515	18.87	23.0	B
10	263		300	15	FL2578	CTPM2501530D415	22	590	20.87	23.0	B
10	286	750	275	15	FL2873	CTPM2801527D415	23	610	18.87	23.0	B
12	382		275	20	FL2882	CTPM2802027D420	26	705	21.12	28.9	B
12	438		300	25	FL2890	CTPM2802530D425	24	790	23.12	34.0	B
12	630		250	30	FL4472	CTPM4403025D430	43	1154	17.59	44.2	C
12	700		300	40	FL4472	CTPM4404030D440	43	1154	17.59	55.3	C
10	808		325	50	FL4477	CTPM4405032D450	50	1290	18.84	65.5	D
14	1050		250	50	FL4485	CTPM4405025D450	59	1515	20.84	65.5	D
16	1313		200	50	FL4493	CTPM4405020D450	59	1730	22.84	65.5	D
18	1576		200	60	FL4402	CTPM4406020D460	71	1980	25.09	90.8	D
18	2101		150	60	FL4413	CTPM4406015D460	71	2290	27.84	90.8	D
18	2251		175	75	FL4421	CTPM4407517D475	76	2510	29.84	116.6	D
18	2626		200	100	FL4429	CTPM4410020D4100	94	2730	31.84	136.3	D
14	2918		225	125	FL4440	CTPM4412522D4125	129	3035	34.59	144.0	D

Premium class H VPI insulation system, regreaseable ball bearings, three normally closed thermostats (one per phase). Surpasses the requirements for MG1, Part 31 for operation on inverter power. Sensorless control using the companion Baldor VS1CTD drive. Vertical shaft up mounting with opposite drive end bracket designed to match common cooling tower gear foot prints. Superior exterior paint system to provide long durable motor life. Insulated ODE bearing on FL440 frames.

Hp	RPM	Frame	Torque	Catalog Number	Mult. Sym.	*Motor Height inches	Approx. Wt. lbs.	Full Load Amps @ 460V	Min Air Flow Required (ft/min)
10	550	FL2554	95	CTPM2501055	E2	14.87	375	11	500
10	375	FL2562	140	CTPM2501037	E2	16.87	440	11	
15	375	FL2570	210	CTPM2501537	E2	18.87	515	14	
15	300	FL2578	263	CTPM2501530	E2	20.87	590	22	
15	275	FL2873	286	CTPM2801527	E2	18.87	610	23	750
20	275	FL2882	382	CTPM2802027	E2	21.12	705	26	
25	300	FL2890	438	CTPM2802530	E2	23.12	790	24	
30	250	FL4472	630	CTPM4403025	E2	17.59	1154	43	
40	300	FL4472	700	CTPM4404030	E3	17.59	1154	43	
50	325	FL4477	808	CTPM4405032	E2	18.84	1290	50	
50	250	FL4485	1050	CTPM4405025	E2	20.84	1515	59	
50	200	FL4493	1313	CTPM4405020	E2	22.84	1730	59	
60	200	FL4402	1576	CTPM4406020	E2	25.09	1980	71	
60	150	FL4413	2101	CTPM4406015	E2	27.84	2290	71	
75	175	FL4421	2251	CTPM4407517	E2	29.84	2510	76	
100	200	FL4429	2626	CTPM4410020	E2	31.84	2730	94	
125	225	FL4440	2918	CTPM4412522	E2	34.59	3035	129	

* Height of motor excluding shaft extension

BALDOR

Baldor Cooling Tower Package Price for Motor and Drive

Frame	Motor & Drive Catalog No.	Package List Price	Mult. Sym.	Motor List Price	Drive List Price	Combined List Price
FL2554	CTPM2501055D410	8,226	CT	5,300	2,926	8,226
FL2562	CTPM2501037D410	10,986	CT	8,060	2,926	10,986
FL2570	CTPM2501537D415	14,544	CT	10,800	3,744	14,544
FL2578	CTPM2501530D415	16,564	CT	12,820	3,744	16,564
FL2873	CTPM2801527D415	17,344	CT	13,600	3,744	17,344
FL2882	CTPM2802027D420	19,747	CT	15,300	4,447	19,747
FL2890	CTPM2802530D425	22,500	CT	17,000	5,500	22,500
FL4472	CTPM4403025D430	30,480	CT	23,810	6,670	30,480
FL4472	CTPM4404030D440	32,002	CT	23,810	8,192	32,002
FL4477	CTPM4405032D450	35,580	CT	25,750	9,830	35,580
FL4485	CTPM4405025D450	37,510	CT	27,680	9,830	37,510
FL4493	CTPM4405020D450	39,450	CT	29,620	9,830	39,450
FL4402	CTPM4406020D460	42,548	CT	31,560	10,988	42,548
FL4413	CTPM4406015D460	44,488	CT	33,500	10,988	44,488
FL4421	CTPM4407517D475	48,196	CT	35,440	12,756	48,196
FL4429	CTPM4410020D4100	52,124	CT	37,380	14,744	52,124
FL4440	CTPM4412522D4125	55,118	CT	39,320	15,798	55,118

Establish motor frame size by using CT Wizard or Product Matrix
Select appropriate frame size to quote

VS1CTD Cooling Tower Drive

V*S Control Provides Optimized Cooling Tower Performance and Energy Savings Even Under Low Load Conditions

By optimizing motor speed considerable energy can be saved. The entire cooling tower system must be designed for the "Worst Case" (or highest air flow) scenario. For optimum system performance the fan may need to operate at reduced speed.

As the speed of the motor is decreased, the air flow drops in a corresponding linear fashion. So, for example, if the motor runs at only 50% speed, the air flow is correspondingly reduced to 50% of maximum air flow.

However, the input power to the motor varies with the cube of the motor speed. For example, if a motor is run at half-speed, the power consumed by the motor is 12.5% or 1/8 [i.e. $(½)^3$] of the power consumed at full speed. So, if the needed airflow can be achieved by running at half-speed, it is possible to save a large amount of energy (see energy chart below).

Adjustable Speed Saves Energy

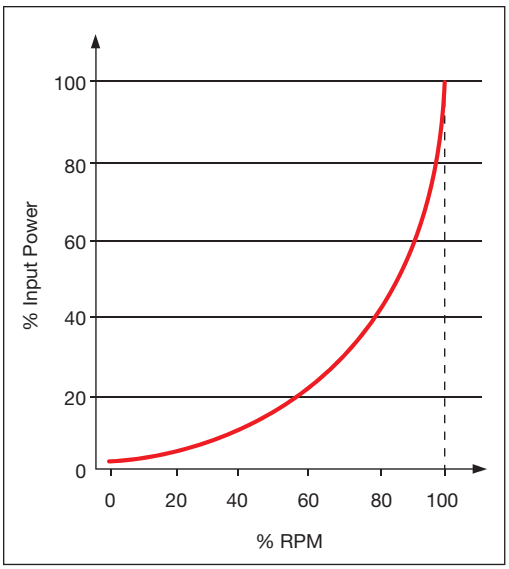

Permanent Magnet Maintain Efficiency Over Wide Load Range

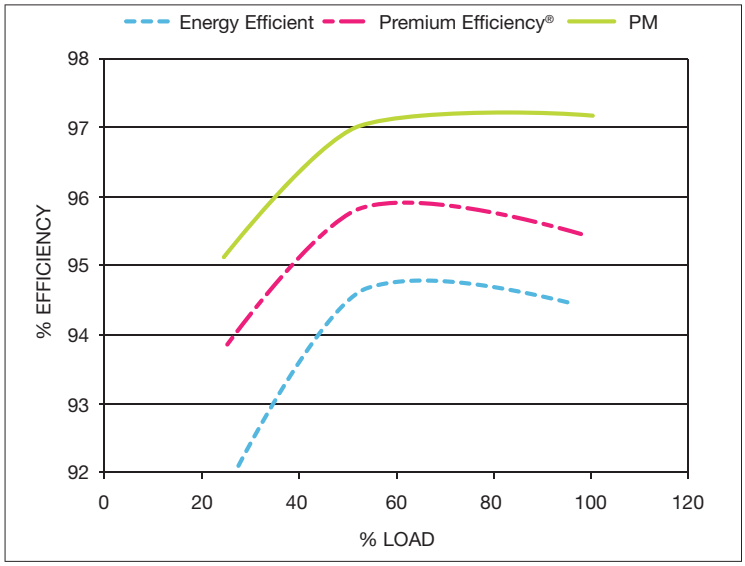

Another important aspect of the PM motor design versus a traditional induction motor is its ability to maintain high efficiency performance when operating under low load conditions which are typical for variable speed fan applications.

BALDOR

Adjustable Speed Drive Cooling Tower Dimensions

Select drive rating and frame size based upon motor full load amps

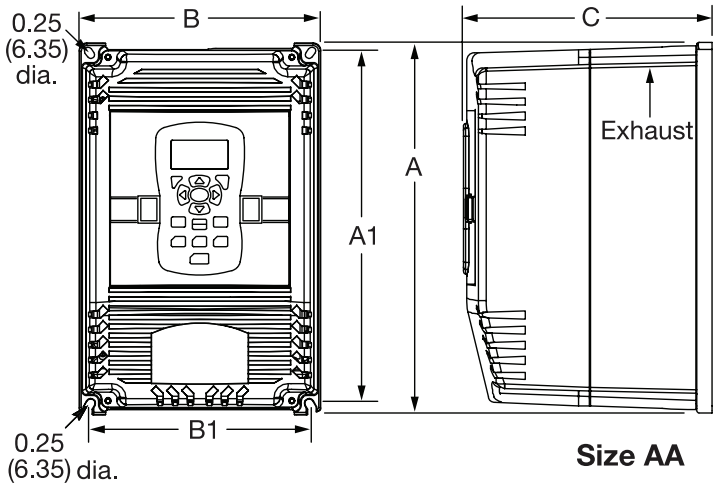

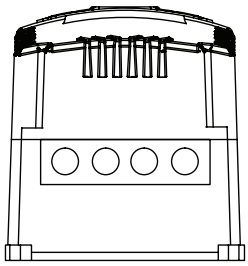

Size	# Holes	Diameter inches (mm)
AA	4	0.870 (22)

Size AA

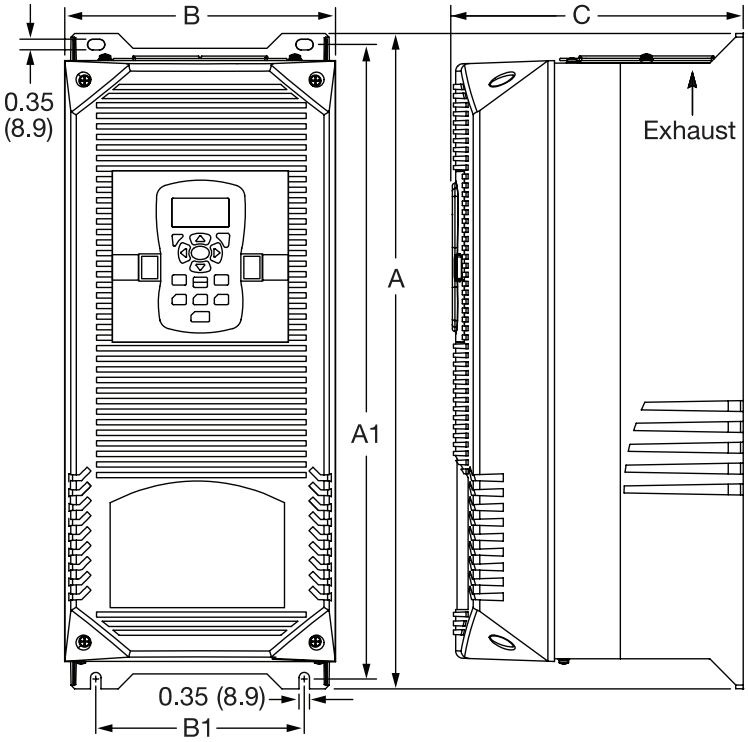

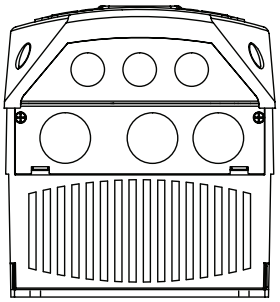

Size	# Holes	Diameter inches (mm)
B	3 3	1.115 (28.3) 1.362 (34.6)
C	3 3	1.115 (28.3) 1.680 (42)
D	3 2 1 1	1.115 (28.3) 2.470 (62.7) 1.362 (34.6 0.500 (12.7)
E	3 2 1 1	1.115 (28.3) 4.000 (102) 1.680 (43) 0.500 (12.7)

Sizes B, C, D and E

Frame Size	Dimensions inches (mm)					Weight lb (kg)
	Outside			Mounting		
	Height (A)	Width (B)	Depth (C)	Height (A1)	Width (B)	
AA	12.27 (311)	7.97 (202)	8.21 (208)	11.75 (298)	7.38 (187)	20 (9.1)
B	18 (457)	9.10 (231)	9.75 (248)	17.25 (438)	7.00 (178)	30 (13.6)
C	22 (559)	9.10 (231)	9.75 (248)	21.25 (540)	7.00 (178)	60 (27.2)
D	28 (711)	11.50 (292)	13.00 (330)	27.25 (692)	9.50 (241)	120 (54.4)
E	42.81 (1087)	18.75 (476)	16.06 (407)	39.75 (1010)	15.75 (400)	250 (113.4)

Baldor Selection Chart

Series 5	15H	18H	22H Regenerative
Main Attributes			
Analog Mircrodrive; V/Hz ; Open Chassis or NEMA 4X enclosures, compact and low cost A 1 Hp, NEMA 1 also available	Basic V/Hz Control, 500-1000 Hp NEMA 1 enclosure	Closed loop vector, 500-1000 Hp NEMA 1 enclosure, zero speed torque, auto motor tuning, digital speed and torque control	22H is a version of the 18H with a Regenerative front end
Hp Range			
1/2 to 5	500 to 1000	500 to 1000	10 to 50
Voltage Range			
115V/230V 1-Phase 230V/460V 3-Phase	460V 3-Phase	460V 3-Phase	230V/460V 3-Phase
Enclosure Selection			
Chassis or NEMA 4X/12, 1 Hp NEMA 1	NEMA 1 (500 to 1000 Hp)	NEMA 1 (500 to 1000 Hp)	IP20
Control Mode			
V/Hz	V/Hz	Closed Loop Vector Only	Closed Loop Vector
Speed Range (Typ.)			
20:1	20:1	1000:1	1000:1 Closed Loop Vector
Communications Options			
None	Option Cards for RS232/RS485, DeviceNet, Profibus and Modbus	Option Cards for RS232/RS485, DeviceNet, Profibus and Modbus	Option Cards for RS232/RS485, DeviceNet, Profibus and Modbus
Operator Interface			
Analog Controls	Local or Remote (NEMA 4) Mounted 32 character alpha-numeric LCD display	Local or Remote (NEMA 4) Mounted 32 character alpha-numeric LCD display	Local or Remote (NEMA 4) Mounted 32 character alpha-numeric LCD display
Differentiating Feature			
Easy-to-Use Basic Startup Menu; Runs Right Out of the Box; Optional I/O Expansion Cards	Integrated TEFC motor and drive package, NEMA 1 and NEMA 4X designs, reduced total install cost	Easy-to-Use Basic Startup Menu; Runs Right Out of the Box; Optional I/O Expansion and Speed Feedback Cards	Regenerative Applications
Matched Performance® Motors			
XE, M & CP Standard-E®, EM & ECP Super-E®	NEMA 1 CSM and JMSM NEMA 4X CWDSM	VS-Master, RPM-AC, ZDM VectorDuty®, ZDNM VectorDuty, ZDWNM VectorDuty	VS-Master, RPM-AC, ZDM VectorDuty, ZDNM VectorDuty, ZDWNM VectorDuty

BALDOR

Series 5 Micro Inverters

1/2 thru 2 Hp	**97-132 VAC**	**1 Phase - 50/60 Hz**
1/2 thru 2 Hp	**195-265 VAC**	**1 Phase - 50/60 Hz**
2 thru 3 Hp	**195-265 VAC**	**3 Phase - 50/60 Hz**
1 thru 5 Hp	**323-529 VAC**	**3 Phase - 50/60 Hz**

Applications: Variable torque, constant torque or constant horsepower applications. New installations, replacements and original equipment manufacturers (OEM).

Features: NEMA 4X or open chassis mount standard.(1) Output frequency 0.25 to 120 Hz with peak overload capacity of 150%. Separate accel/decel rates and controlled reversing.

Design Specifications
- PWM output
- Accel/decel rate adjustment
- Controlled reversing
- Adjustable current limit
- I^2t motor overload protection
- Adjustable slip compensation
- Min/max output frequency adjustment
- Selectable auto/manual restart

Operator Interface-Enclosed Units
- Start/Stop command
- NEMA 4X enclosure (1)
- Power on/off
- Rotary speed control
- Fwd/Rev optional
- Auto/Manual optional

Environmental and Operating Conditions
- Input voltage:
  1 phase 115 VAC ±15%,
  1 phase 230 VAC ±15%
  3 phase 230V ±15%
  3 phase 460 ± 15%
- Input frequency 50 or 60Hz ±10%
- Service factor - 1.0
- Duty - continuous
- Humidity - 90% max RH non-condensing
- Altitude - 3300 feet max without derate
- Chassis mount or NEMA 4X enclosure as standard (1)

Protective Features
- Selectable automatic restart at momentary power loss
- Power indicator
- Status indicator
- Adjustable time base overload
- Electronic in rush current limiting

Output Ratings	Overload Capacity	150% for 120 seconds	
	Voltage - 3 Phase	0-230 VAC (RMS), 0-460 V AC (RMS)	
Control Spec	Control Method	Sinewave carrier input, PWM output	
	PWM Frequency	Rated 8.0 kHz	
	V/Hz Ratio	Factory set for optimum output	
	Torque Boost	Factory set for 60 Hz motors. Adjustable 6-30% for 50 Hz motors	Adjustable 0-30% max
	Current Limit	Adjustable 63 to 188% of rated output	0-200%
	Frequency Setting	0-5 VDC, 0-10 VDC with external resistor network, non-isolated input	
	Accel/Decel	Separate accel/decel rates, 0.3-20 sec for 60 Hz motors	0.3-20 Sec
		Combined accel/decel for 50 Hz motors	
Protective Functions	Inverter Trip	Over voltage, over current, under voltage, motor overload, output short circuit	
	Status Indicators	Tricolor LED indicator for status and green LED indicator for power on	
	Short Circuit	Output phase to phase	
Ambient Conditions	Temperature	0-45℃	0-50°C
	Cooling	Convection 1/2 - 2 Hp; Forced Air 3-5 Hp	Convection
	Enclosure	Open chassis	NEMA 4X (IP65)

(1) A NEMA 1 enclosure is available as Catalog Number ID5601-EO. The dimensions and mounting match the BC140 DC drive.

Series 5 Micro Inverters

Hp/kW	Input Voltage	Output Current		Catalog Number		List Price	Mult. Sym.	Approx. Shpg. Wgt.	Dimensions (inches)				
									Outside			Mounting	
		Cont.	120 Sec.						H	W	D	H	W
Open Chassis Mount – Single Phase Input													
0.5/0.37	115/230	2.4	3.6	**ID56F50-CO**	◊	352	E9	4	4.3	3.9	2.75	3.8	2.5
1/0.75	115/230	4	6	**ID5601-CO**	◊	426	E9	5	4.3	3.9	5	3.87	3.7
2/1.5	115/230	5.5	8.25	**ID5602-CO**	◊	554	E9	6	4.67	5.58	5.7	3.87	2.5
Open Chassis Mount – Three Phase Input													
2/1.5	230	6.7	10.1	**ID5202-CO**	◊	672	E9	5	8.55	4.68	4.5	6.5	3.9
3/2.25	230	8.8	13.2	**ID5203-CO**	◊	708	E9	5	8.55	4.68	4.5	6.5	3.9
1/0.75	460	2.5	3.75	**ID5401-CO**	◊	732	E9	5	8.55	4.68	4.5	6.5	3.9
2/1.5	460	4	6	**ID5402-CO**	◊	751	E9	5	8.55	4.68	4.5	6.5	3.9
3/2.25	460	4.5	6.75	**ID5403-CO**	◊	772	E9	5	8.55	4.68	4.5	6.5	3.9
5/3.7	460	7.6	11.4	**ID5405-CO**	◊	986	E9	5	8.55	4.68	4.5	6.5	3.9
NEMA 1 Enclosed - Single Phase Input													
1/0.75	115/230	4	6	**ID5601-EO**	◊	514	E9	6	7.13	6.25	2.75	—	—
NEMA 4X Enclosed – Single Phase Input													
1/0.75	115/230	3.6	5.4	**ID5601-WO**	◊	680	E9	6	9.53	5.51	5.86	8.85	—
1/0.75	115/230	3.6	5.4	**ID5601-BO**	◊	638	E9	6	9.53	5.51	5.86	8.85	—
2/1.5	115/230	5.5/6.7	8.3/10.0	**ID5602-WO**	◊	960	E9	6	9.8	7.55	7.25	9.25	1
2/1.5	115/230	5.5/6.7	8.3/10.0	**ID5602-BO**	◊	906	E9	8	9.8	7.55	7.25	9.25	1
NEMA 4X Enclosed – Three Phase Input													
3/2.25	230	9	13.5	**ID5203-WO**	◊	1,088	E9	6	9.8	7.55	7.25	9.25	1
3/2.25	230	9	13.5	**ID5203-BO**	◊	1,034	E9	6	9.8	7.55	7.25	9.25	1
3/2.25 (1)	460	4.6	6.9	**ID5403-WO**	◊	1,152	E9	6	9.8	7.55	7.25	9.25	1
3/2.25 (1)	460	4.6	6.9	**ID5403-BO**	◊	1,098	E9	6	9.8	7.55	7.25	9.25	1
5/3.7	460	8.3	12.45	**ID5405-WO**	◊	1,226	E9	6	9.8	7.55	7.25	9.25	1
5/3.7	460	8.3	12.45	**ID5405-BO**	◊	1,173	E9	6	9.8	7.55	7.25	9.25	1

(1) Jumper configurable for 1 HP and 2 HP

NOTE: -WO is white in color -BO is black in color; -EO is NEMA 1.

◊ Stock Model Numbers

Series 5 Micro Inverter Optional Accessories

	Catalog Number	Description	List Price	Mult. Sym.	Approx. Shpg. Wgt.
◊	**ID5RGA-1**	Dynamic braking kit for open chassis 115/230V 1/2 Hp and 1 Hp rated controls	217	E9	3
◊	**ID5SI-1**	Signal isolator for open chassis units Provides isolation for up to 24 VDC and 4-20mA command signals and run relay output. Select relay as N.O. or N.C. contacts rated at 125 VAC @ 0.5A	189	E9	4
◊	**ID5SI-2**	Signal isolator for NEMA 4X enclosed units Provides isolation for up to 24 VDC and 4-20mA command signals and run relay output. Select relay as N.O. or N.C. contacts rated at 125 VAC @ 0.5A	214	E9	1
◊	**ID5AMS-1**	Auto/Manual selection switch for NEMA 4X enclosed units Allows selection of remote or on-board speed commands	52	E9	1
◊	**ID5FRS-1**	Forward/Stop/Reverse selection switch for NEMA 4X enclosed units Allows selection of forward or reverse motor direction commands	29	E9	1
◊	**ID5FRS-2**	Forward/Stop/Reverse selection switch for NEMA 1 enclosed units. Allows selection of forward or reverse motor direction commands.	29	E9	1

◊ Stock Model Numbers

BALDOR

Series 5 Micro Inverters

Dimensions: in (mm)

Series 5 Micro Inverter – Open Chassis

Dual Voltage 115/230V Series 5 – 1/2 Hp

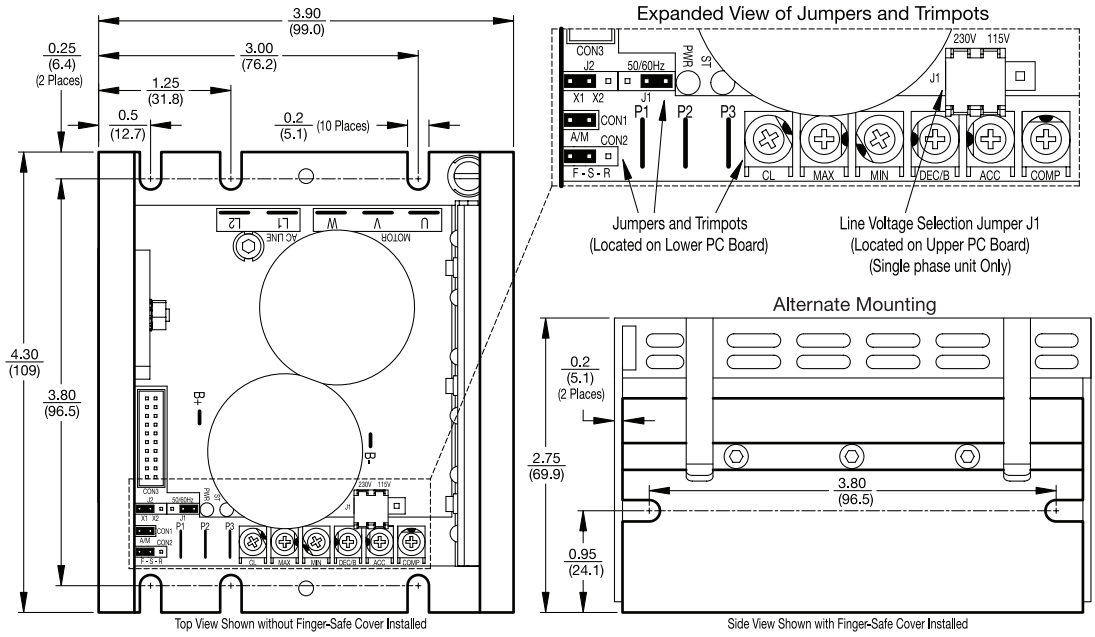

Series 5 Micro Inverter – NEMA 1

"Knockouts" for Standard 3/4-Inch Fittings. Feed-Through Bushing.

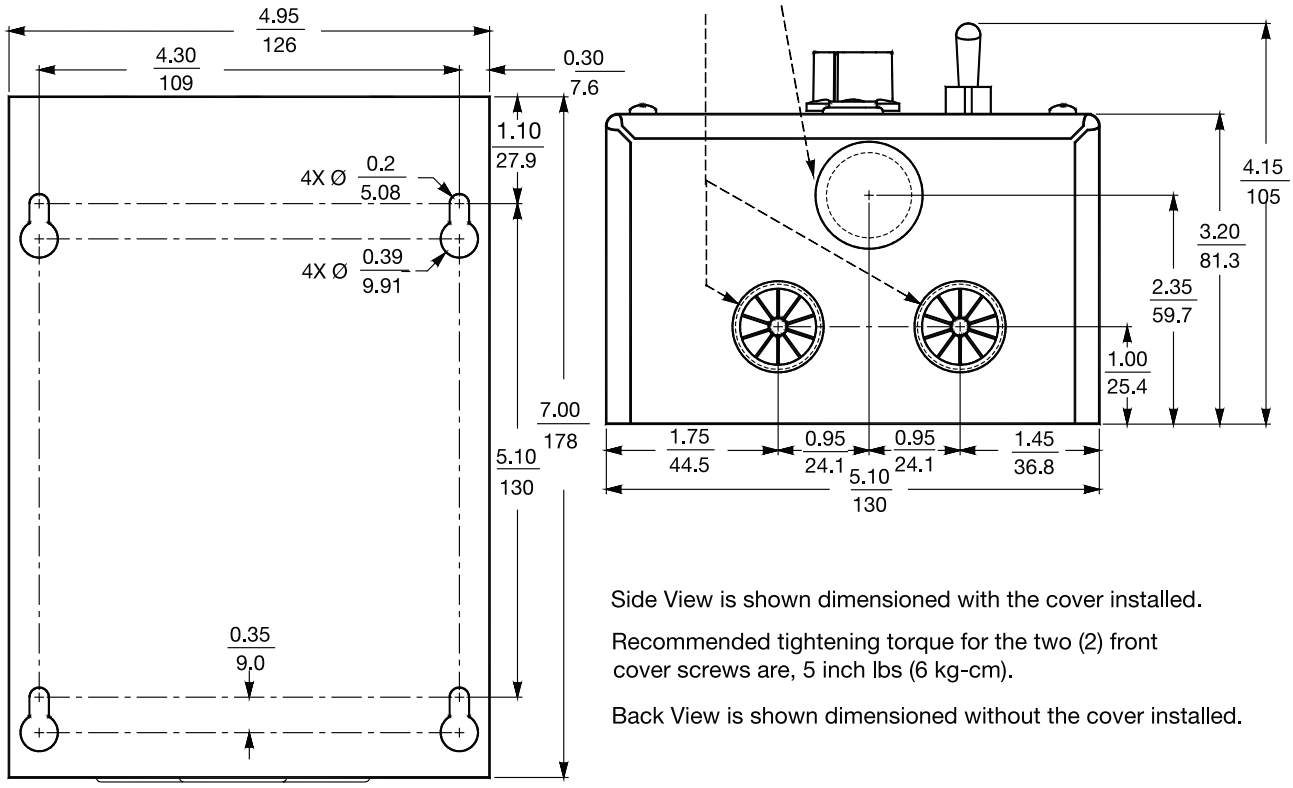

Side View is shown dimensioned with the cover installed.

Recommended tightening torque for the two (2) front cover screws are, 5 inch lbs (6 kg-cm).

Back View is shown dimensioned without the cover installed.

Series 5 Micro Inverters

Dimensions: in (mm)

Series 5 Micro Inverter – Open Chassis

Dual Voltage 115/230V Series 5 – 1 & 2 Hp

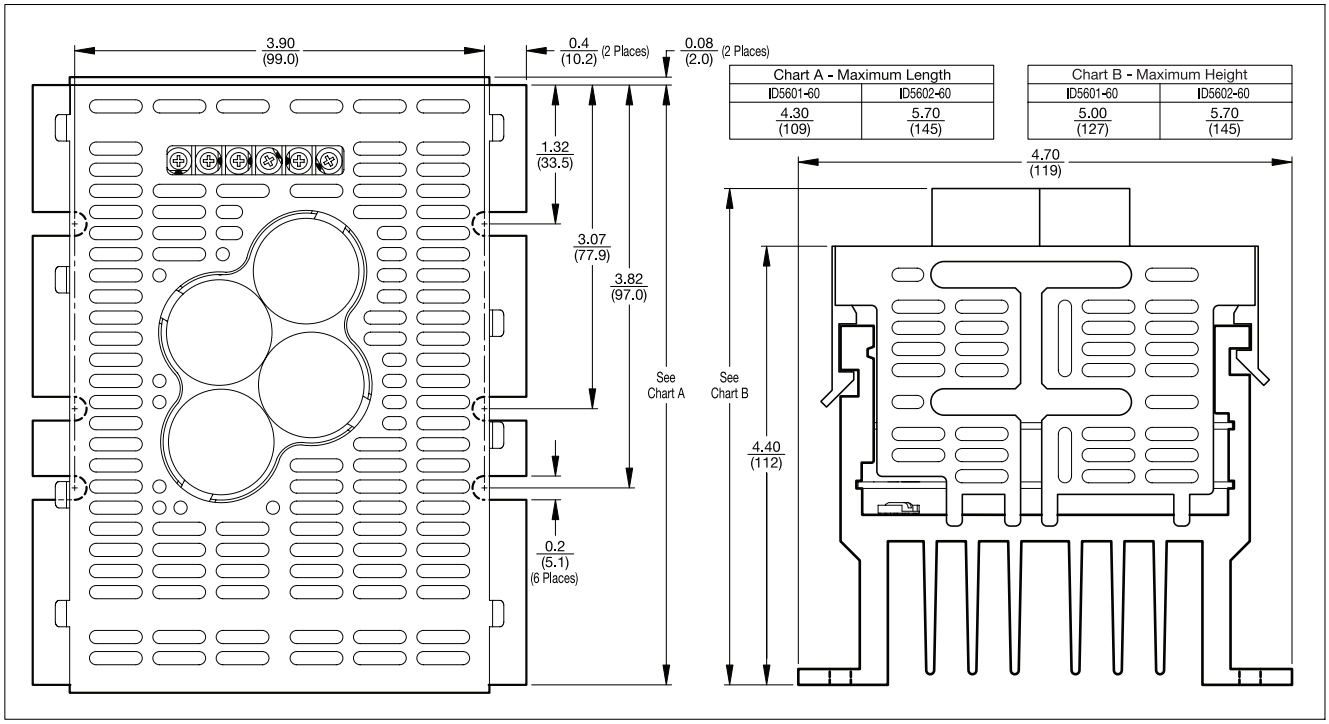

Chart A - Maximum Length	
ID5601-60	ID5602-60
4.30 (109)	5.70 (145)

Chart B - Maximum Height	
ID5601-60	ID5602-60
5.00 (127)	5.70 (145)

Series 5 – All Three Phase

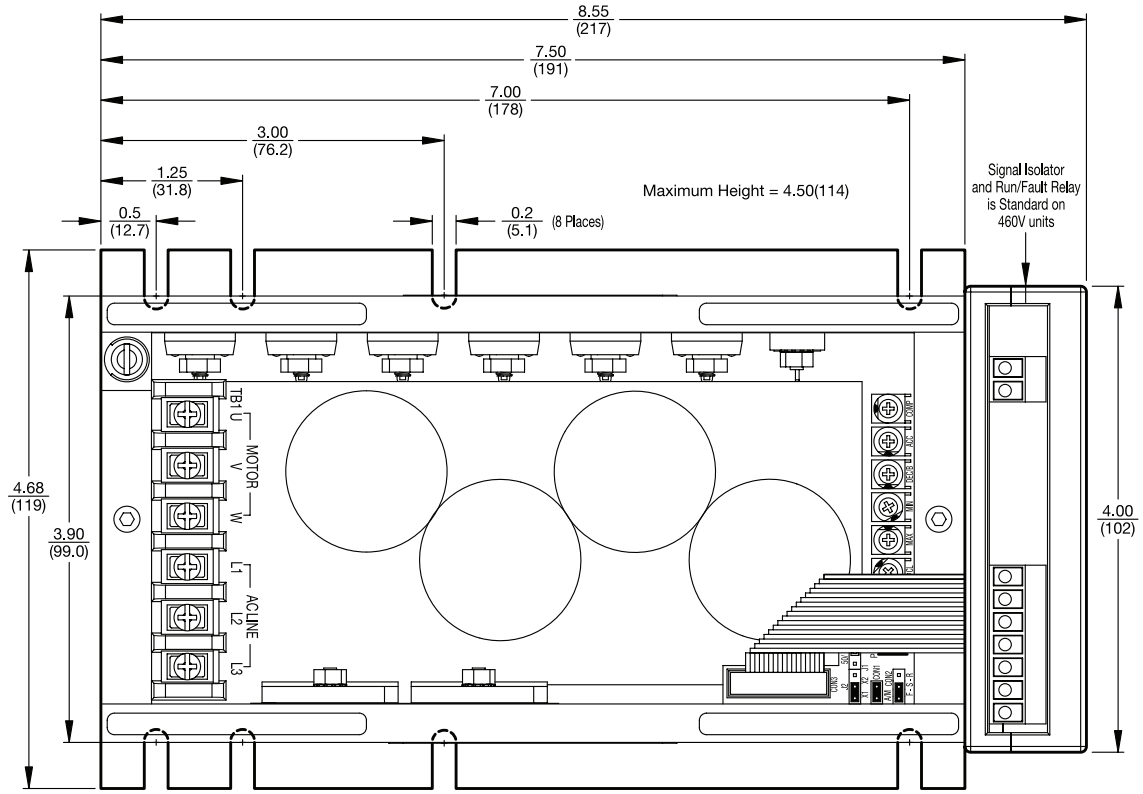

BALDOR

Series 5 Micro Inverters

Dimensions: in (mm)

Series 5 Micro Inverter – Washdown

1 Hp

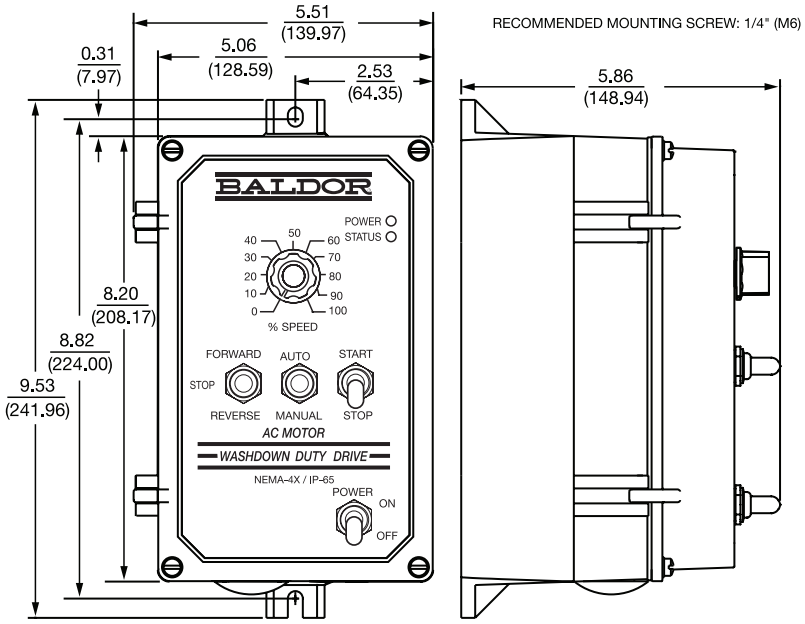

SHOWN WITH OPTIONAL AUTO/MANUAL AND FORWARD-STOP-REVERSE

2 thru 5 Hp

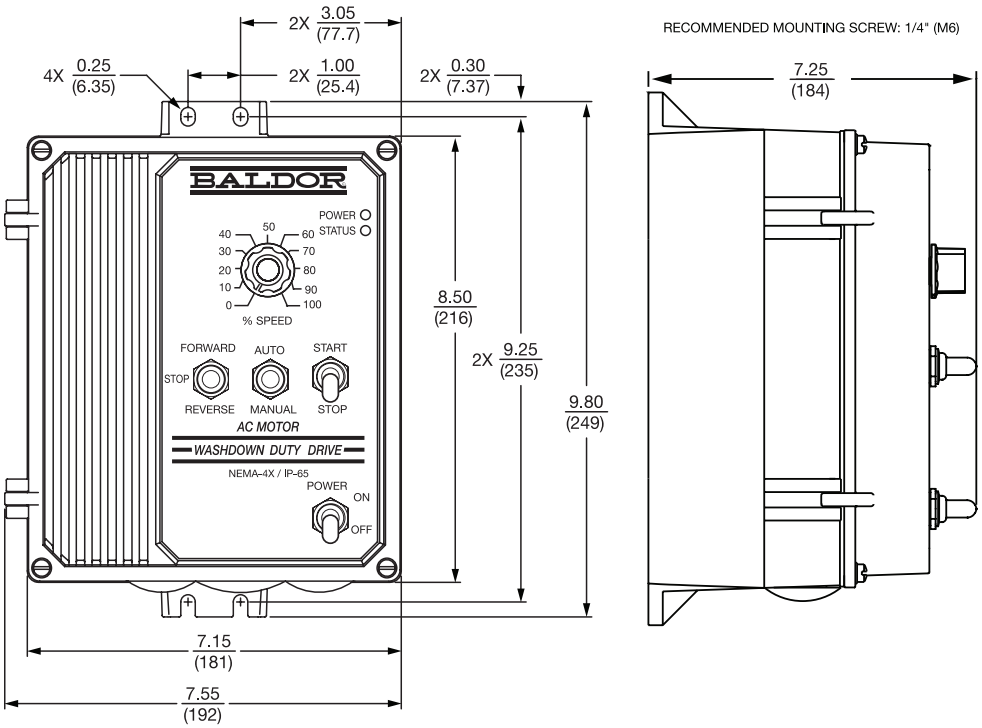

NOTE: Dimensions for reference only. Contact a Baldor District Office or www.baldor.com for the detailed dimension drawing for your specific catalog number.

HiHP Series
15H Inverter Drive

500 thru 1000 Hp **460 VAC** **3 Phase - 50/60 Hz**

Applications: Constant torque, variable torque or constant horsepower applications. New installations, replacements and original equipment manufacturers (OEM).

Features: NEMA 1 enclosure as standard. Output frequency 0.25 to 400 Hz with peak overload capacity of 170-200%. Separate accel/decel rates and controlled reversing. Built in two and three input PID process control loop.

Design Specifications

- Process follower 0-5 VDC, 0-10 VDC, 4-20 mA
- Free run or ramp stop
- Selectable preset speeds
- Jog speed
- Dynamic braking (optional on size C2 and larger)
- DC injection braking
- 2 analog meter outputs
- 2 opto isolated outputs
- 2 relay outputs

Operator Keypad

- Forward/Reverse command
- Motor RUN and JOG
- Local/Remote key
- Stop command
- Parameter setting and display
- 32 character display
- Remote mount to 100 feet (60m) from control

Environmental and Operating Conditions

- Input voltage
  3 phase 378-480 VAC ±10%
  3 phase 573-600 VAC ±10%
- Input frequency - 50 or 60Hz ±5%
- Service factor - 1.0
- Duty - continuous
- Humidity - 90% max RH non-condensing
- Altitude - 3300 feet (1000m) max without derate

Protective Features

- Selectable automatic restart at momentary power loss
- DC bus charge indicator
- Fault indicator
- Adjustable time based overload
- Cause of last 31 trips retained in memory
- Digital display for fault conditions
- Linear heat sink thermal sensor
- Isolated control circuitry

BALDOR

HiHP Series 15H Inverter Drive

Output Ratings	Overload Capacity	150% for 60 seconds; 170-200% for 3 seconds for constant torque
		115% for 60 seconds for variable torque
	Frequency	0.25-400 Hz
	Voltage	0-Maximum input voltage (RMS)
Input Ratings	Frequency	50 or 60 Hz ± 5%
	Voltage	340 - 528 VAC
	Phase	Three phase (or single phase with derate)
	Impedance	1% minimum
Control Spec	Control Method	Sinewave carrier input, PWM output
	PWM Frequency	2.5 kHz
	V/Hz Ratio	Linear to squared reduced, base frequency, output voltage, minimum frequency limit, maximum frequency limit
	Torque Boost	0-15% of input voltage; automatic with manual override
	Skip Frequency	Three zones 0-Max frequency
	Frequency Setting	0-5 VDC, 0-10 VDC, 4-20mA, digital via optional RS232/485
	Accel/Decel	Separate accel/decel rates, 0-3600 sec to maximum frequency
Protective Functions	Inverter Trip	Over voltage, over current, under voltage, external trip, heatsink thermal, motor overload
	Stall Prevention	Over voltage suppression, overcurrent suppression
	External Output	OPTO isolated outputs, relay outputs, and LED indicator for trip
	Short Circuit	Phase to phase, phase to ground
LCD Display	Running	Output frequency, set frequency, output current(%), voltage, RPM, custom units
	Setting	Parameter values for setup and review
	Trip	Separate message for each trip, cause of last 31 trips retained in memory
Ambient Conditions	Temperature	-10 to + 40°C For UL Listing
	Cooling	Forced air included when required

OPTIONS: See pages 104-105 for optional Expansion Boards including RS-232, RS-485.

HiHP Series 15H Inverter Drive Output Ratings

Heavy Duty			Normal Duty			List Price	Mult. Sym.
Hp	Continuous Amps	Peak Amps	Hp	Continuous Amps	Peak Amps		
460 Volts - Three Phase							
500	590	1180	600	710	820	63,830	E1
600	710	1210	700	830	960	74,468	E1
700	830	1660	800	950	1110	85,816	E1
800	950	1710	900	1070	1230	95,745	E1
900	1100	720	1000	1205	—	106,383	E1
1000	1205	1710	—	—	—	117,021	E1

HiHP Series 15H Inverter Drive Packaged Drives

480 VAC Base Drive Model Number						
15H Series Inverter	**ID15H 4500-E0**	**ID15H 4600-E0**	**ID15H 4700-E0**	**ID15H 4800-E0**	**ID15H 4900-E0**	**ID15H 41000-E0**
Base Drive List	63,830	74,468	85,816	95,745	106,383	116,312
HP Rating (110% Overload, Normal Duty)	600	700	800	900	1000	1100
HP Rating (150% Overload, Heavy Duty)	500	600	700	800	900	1000
FLA @ 2.5 kHz	590	710	830	950	1070	1200
Enclosure Options						
NEMA 1 Cabinet Ventilated						
NEMA 12 Cabinet Ventilated						
NEMA 12 Cabinet with A/C						
NEMA 4 Cabinet with A/C						
NEMA 4X Cabinet with A/C						
NEMA 3R Rainproof						
Input Protection & Disconnect Options						
Input Fuses Only						
Fused Disconnect Switch & Rotary Handle						
Circuit Breaker Only	9280	12210	12210	12210	14440	19390
Circuit Breaker Disconnect & Rotary Handle	9630	12560	12560	12560	14790	19740
Door Mounted Operator Devices						
Door Mounted OIM (Remote Keypad)	75	75	75	75	75	75
Maintained Start/Stop Switch	105	105	105	105	105	105
Momentary Start/Stop Push Buttons	180	180	180	180	180	180
E-Stop Push Button (Mushroom Head)	120	120	120	120	120	120
Jog Push Button	90	90	90	90	90	90
2 or 3 Position Selection Switch	90	90	90	90	90	90
Pilot Light(1)	85	85	85	85	85	85
Manual Potentiometer	120	120	120	120	120	120
Contactors, Overloads, Starters, Control Transformers & Line Reactors						
Input Contactor(1)						
Output Contactor(1)						
Drive Bypass Control(1)	28485	32085	42200	48540	50535	58270
Motor Overload Relay						
Blower Motor Starter(1,4)						
Control Transformer: 460:120 VAC, 250VA (2)						
3% Impedance Input Line or Load Reactor						
Other peripheral equipment						
Space Heater (100W)	120	120	120	120	120	120
Analog Input or output Isolator	980	980	980	980	980	980
Shunt Trip device	280	280	280	280	280	280
Undervoltage Release Device	355	355	355	355	355	355
RFI/EMI filter						
DC Power Supply	210	210	210	210	210	210
MOV surge protection	100	100	100	100	100	100
Input IEEE 519-1992 Harmonic Filter						
Dynamic Braking - Transistor + Resistor						
1200W resistors	849	849	849	849	849	849
2400W resistors	1299	1299	1299	1299	1299	1299
4800W resistors	2107	2107	2107	2107	2107	2107

(1) Requires Control Transformer option
(2) Add $100 for each 100VA over 250VA
(3) Add $100 for each 100W over the first 100W
(4) Required on TEBC motors

The bypass option includes:
- bypass contactor - reduced voltage starter (digital soft start) - additional bay (for bypass contactor, digital soft start, and wiring)

BALDOR

HiHP Series 18H Vector Drive

500 thru 1000 Hp **460 VAC** **3 Phase - 50/60 Hz**

Applications: Constant torque or constant horsepower applications.
New installations, replacements and original equipment manufacturers (OEM).

Features: NEMA 1 enclosure as standard. Output frequency 0-500Hz with peak overload capability of 170-200%. Automatic tuning to motor and full rated torque down to zero speed. Digital speed or torque control. Built in two and three input PID process control loop.

Design Specifications

- Motor shaft orient to marker
- Process follow ±5VDC 0-5 VDC, ±10VDC 0-10 VDC ,4-20mA, digital via keypad or optional RS232/485
- Linear or S-curve deceleration
- 15 preset speeds
- 2 assignable analog outputs
- 2 assignable opto outputs
- 2 assignable relay outputs
- 2 assignable analog inputs

Operator Keypad

- Forward/Reverse command
- Motor RUN and JOG
- Local/Remote key
- Stop command
- 32 character display
- Remote mount to 100 feet (60m) from control

Environmental and Operating Conditions

- Input voltage
  3 phase 378-480 VAC ±10%
  3 phase 573-600 VAC ±10%
- Input frequency
  50 or 60Hz ±5%
- Service factor - 1.0
- Duty - continuous
- Humidity - 90% max RH non-condensing
- Altitude - 3300 feet (1000m) max without derate

Protective Features

- Adjustable current limit
- Isolated control circuitry
- Digital display for fault conditions
- Selectable automatic restart at momentary power loss
- DC bus charge indicator
- Cause of last 31 trips retained in memory

HiHP Series 18H Vector Drive

Output Ratings	Overload Capacity	150% for 60 seconds, 170-200% for 3 seconds for constant torque
		115% for 60 seconds for variable torque
	Frequency	0-500 Hz
	Voltage	0-maximum input voltage (RMS)
Input Ratings	Frequency	50 or 60 Hz ±5%
	Voltage	340 - 528 VAC
	Phase	Three phase (or single phase with derate)
	Impedance	1% minimum
Control Spec	Control Method	Microprocessor controlled PWM output
	PWM Frequency	2.5 kHz
	Speed Setting	±5 VDC, 0-5 VDC ±10 VDC, 0-10 VDC, 4-20 mA; digital via keypad, RS232/485
	Accel/Decel	0-3600 sec.
	Motor Matching	Automatic tuning to motor with manual override
Motor Feedback	Feedback Type	Incremental encoder coupled to motor shaft
	Pulses/Rev	60 -15,000 selectable, 1024 standard
	Voltage Output	2 channel in quadrature, 5 VDC, differential
	Marker Pulse	Required for position orientation
	Power Input	5 VDC, 300 mA maximum
	Max. Frequency	1 MHz
	Positioning	Buffered encoder pulse train output for position loop controller
Protective Functions	Vector Trip	Missing control power, over current, over voltage, under voltage, motor over speed
		Over temperature (motor or control), output shorted or grounded, motor overload
	External Output	LED indicator for trip conditions, 4 assignable logic outputs, 2 assignable analog outputs 0-5 VDC
	Short Circuit	Phase to phase, phase to ground
LCD Display	Running	Output frequency, motor RPM; output current, voltage (selectable)
	Setting	Parameter values for setup and review
	Trip	Separate message for each trip, last 31 trips retained in memory
Ambient Conditions	Temperature	-10 to 40°C for UL listing
	Cooling	Forced air included when required

HiHP Series 18H Vector Drive Output Ratings

Heavy Duty			Normal Duty			List Price	Mult. Sym.
Hp	**Continuous Amps**	**Peak Amps**	**Hp**	**Continuous Amps**	**Peak Amps**		
460 Volts - Three Phase							
500	590	1180	600	590	1180	67,021	E1
600	710	1210	700	710	1210	78,191	E1
700	830	1660	800	830	1660	90,106	E1
800	950	1710	900	950	1710	100,532	E1
900	370	630	1000	1205	490	111,702	E1
1000	1205	1710	—	—	—	122,872	E1

BALDOR

HiHP Series 18H Vector Drive Packaged Drives

480 VAC Base Drive Model Number						
18H Series Inverter	**ZD18H 4500-E0**	**ZD18H 4600-E0**	**ZD18H 4700-E0**	**ZD18H 4800-E0**	**ZD18H 4900-E0**	**ZD18H 41000-E0**
Base Drive List	67021	78191	90106	100532	111702	122872
HP Rating (110% Overload, Normal Duty)	600	700	800	900	1000	1100
HP Rating (150% Overload, Heavy Duty)	500	600	700	800	900	1000
FLA @ 2.5 kHz	590	710	830	950	1070	1200
Enclosure Options						
NEMA 1 Cabinet Ventilated						
NEMA 12 Cabinet Ventilated						
NEMA 12 Cabinet with A/C						
NEMA 4 Cabinet with A/C						
NEMA 4X Cabinet with A/C						
NEMA 3R Rainproof						
Input Protection & Disconnect Options						
Input Fuses Only						
Fused Disconnect Switch & Rotary Handle						
Circuit Breaker Only	9280	12210	12210	12210	14440	19390
Circuit Breaker Disconnect & Rotary Handle	9630	12560	12560	12560	14790	19740
Door Mounted Operator Devices						
Door Mounted OIM (Remote Keypad)	75	75	75	75	75	75
Maintained Start/Stop Switch	105	105	105	105	105	105
Momentary Start/Stop Push Buttons	180	180	180	180	180	180
E-Stop Push Button (Mushroom Head)	120	120	120	120	120	120
Jog Push Button	90	90	90	90	90	90
2 or 3 Position Selection Switch	90	90	90	90	90	90
Pilot Light(1)	85	85	85	85	85	85
Manual Potentiometer	120	120	120	120	120	120
Contactors, Overloads, Starters, Control Transformers & Line Reactors						
Input Contactor(1)						
Output Contactor(1)						
Drive Bypass Control(1)	28485	32085	42200	48540	50535	58270
Motor Overload Relay						
Blower Motor Starter(1,4)						
Control Transformer: 460:120 VAC, 250VA (2)						
3% Impedance Input Line or Load Reactor						
Other peripheral equipment						
Space Heater (100W)	120	120	120	120	120	120
Analog Input or output Isolator	980	980	980	980	980	980
Shunt Trip device	280	280	280	280	280	280
Undervoltage Release Device	355	355	355	355	355	355
RFI/EMI filter						
DC Power Supply	210	210	210	210	210	210
MOV surge protection	100	100	100	100	100	100
Input IEEE 519-1992 Harmonic Filter						
Dynamic Braking - Transistor + Resistor						
1200W resistors	849	849	849	849	849	849
2400W resistors	1299	1299	1299	1299	1299	1299
4800W resistors	2107	2107	2107	2107	2107	2107

(1) Requires Control Transformer option
(2) Add $100 for each 100VA over 250VA
(3) Add $100 for each 100W over the first 100W
(4) Required on TEBC motors

The bypass option includes:
- bypass contactor - reduced voltage starter (digital soft start) - additional bay (for bypass contactor, digital soft start, and wiring)

Custom HiHP Series 15 / Series 18 Packaged Drives

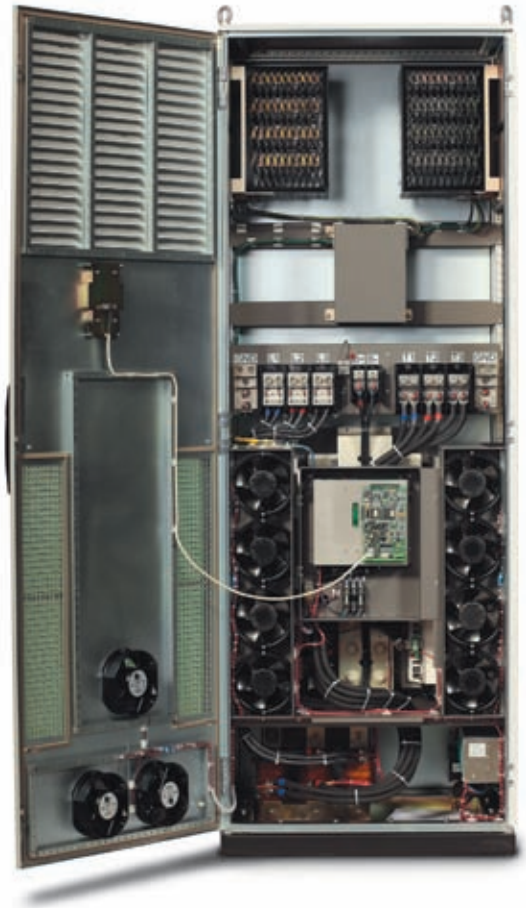

Packaged Baldor V*S Drives provide custom solutions for customer applications. Packaged Baldor V*S Drives are available for 15H/18H drives from 500 to 1000HP. Standard packaged options are shown in this catalog including NEMA 1, 12, 4, 4X & 3R enclosures, Input fusing & circuit breakers, door mounted operators, input/output contactors, bypass, line/load reactors, control transformers, dynamic braking as well as many other peripheral equipment options. If you don't see the option you need, please contact the factory via your Local Baldor District Sales Office, and we will custom engineer it for you.

BALDOR

Series 22H Line Regenerative Vector Drive

10 thru 50 Hp	**230 VAC**	**3 Phase - 50/60 Hz**
10 thru 50 Hp	**460 VAC**	**3 Phase - 50/60 Hz**

Applications: Variable torque, constant torque or constant horsepower applications. New installations, replacements and original equipment manufacturers. (OEM).

Features: NEMA 1 enclosure as standard. Output frequency 0-500Hz with peak overload capability of 170-200%. Automatic tuning to motor and full rated torque down to zero speed. Digital speed or torque control. Built in two and three input PID process control loop.

Design Specifications

- Process follower ±5VDC 0-5 VDC, ±10VDC, 0-10 VDC , 4-20mA, digital via keypad or optional RS232/485
- Linear or S-curve deceleration
- Controlled reversing
- 15 preset speeds
- 2 assignable analog outputs
- 2 assignable logic outputs
- 2 assignable relay outputs
- 2 assignable analog inputs
- Motor shaft orient to marker

Operator Keypad

- Forward/Reverse command
- Motor RUN and JOG
- Local/Remote key
- Stop command
- 32 character display
- Remote mount to 100 feet (60m) from control
- NEMA 4X enclosure when mounted on panel

Environmental and Operating Conditions

- Input voltage
  Three phase 200-240 VAC ±10%
  Three phase 378-480 VAC ±10%
- Input frequency
  50 or 60Hz ±5%
- Service factor - 1.0
- Duty - continuous
- Humidity - 90% max RH non-condensing
- Altitude - 3300 feet (1000m) max without derate

Protective Features

- Adjustable current limit
- Isolated control circuitry
- Digital display for fault conditions
- Selectable automatic restart at momentary power loss
- DC bus charge indicator
- Cause of last 31 trips retained in memory

Output Ratings	Overload Capacity	150% for 60 seconds, 170-200% for 3 seconds for constant torque
		115% for 60 seconds for variable torque
	Frequency	0-500 Hz
	Voltage	0-Maximum input voltage (RMS)
Input Ratings	Frequency	50 or 60 Hz ±5%
	Voltage	180 - 264 VAC; 340 - 528 VAC
	Phase	Three phase
	Impedance	3.0% minimum required
Control Spec	Control Method	Microprocessor controlled PWM output
	PWM Frequency	Adjustable 1-5kHz STD, 1-16 kHz quiet
	Speed Setting	±5 VDC, 0-5 VDC ±10 VDC, 0-10 VDC, 4-20 mA; digital via keypad, RS232/485
	Accel/Decel	0-3600 sec
	Motor Matching	Automatic tuning to motor with manual override
Motor Feedback	Feedback Type	Incremental encoder coupled to motor shaft
	Pulses/Rev	60-15,000 selectable, 1024 standard
	Voltage Output	2 channel in quadrature, 5 VDC, differential
	Marker Pulse	Required for position orientation
	Power Input	5 VDC, 300 mA maximum
	Max. Frequency	1 MHz
	Positioning	Optional buffered encoder pulse train output for position loop controller
Protective Functions	Vector Trip	Missing control power, over current, over voltage, under voltage, motor over speed
		Over temperature (motor or control), output shorted or grounded, motor overload
	External Output	LED indicator for trip conditions, 4 assignable logic outputs, 2 assignable analog outputs 0-5 VDC
	Short Circuit	Phase to phase, phase to ground
LCD Display	Running	Output frequency, motor RPM; output current, voltage (selectable)
	Setting	Parameter values for setup and review
	Trip	Separate message for each trip, last 31 trips retained in memory
Ambient Conditions	Temperature	-10 to +40°C for UL listing
	Cooling	Forced air included when required

OPTIONS: See pages 104-105 for optional Expansion Boards including RS-232, RS-485.

Series 22H Line Regenerative Vector Drive Output Ratings

Catalog Number	Size	Heavy Duty			Normal Duty			List Price	Mult. Sym.
		Hp	Continuous	Peak	Hp	Continuous	Peak		
230 Volts - Three Phase									
ZD22H210-EL	C+	10	28	56	10	28	32	10,019	E1
ZD22H215-EL	C+	15	42	72	15	42	48	11,133	E1
ZD22H220-EL	C+	20	55	110	20	55	62	13,034	E1
ZD22H225-EL	C+	25	68	116	25	68	78	15,226	E1
ZD22H230-EL	D+	30	80	136	30	80	92	16,557	E1
ZD22H240-EL	D+	40	105	200	40	105	120	20,617	E1
ZD22H250-EL	D+	50	130	225	50	130	150	25,308	E1
460 Volts - Three Phase									
ZD22H410-EL	C+	10	15	30	10	15	17	10,431	E1
ZD22H415-EL	C+	15	21	36	15	21	24	11,345	E1
ZD22H420-EL	C+	20	27	50	20	27	31	13,212	E1
ZD22H425-EL	C+	25	34	58	25	34	39	14,888	E1
ZD22H430-EL	D+	30	40	70	30	40	46	16,806	E1
ZD22H440-EL	D+	40	55	100	40	55	63	20,730	E1
ZD22H450-EL	D+	50	65	115	50	65	75	25,015	E1

Dimensions in/(mm)

Size	Outside			Mounting		Approx. Shpg. Wgt.
	Height	Width	Depth	Height	Width	
C+	30 (762)	11.5 (292)	12.2 (310)	29.25 (743)	10.5 (267)	160
D+	36 (914)	14.5 (368)	12.2 (310)	35.25 (895)	13.50 (343)	280

Series 15H, 18H, and 22H Keypad Extension Cable

For the convenience of our customers, we offer a connector plug/cable assembly.
This assembly provides the connectors from the keypad to the control for remote keypad operation.

Catalog Number	Cable Extension Length	List Price	Mult. Sym.	Approx. Shpg. Wgt.
CBLH015KP	5 feet (1.5 meter)	73	E8	1
CBLH030KP	10 feet (3.0 meter)	104	E8	1
CBLH046KP	15 feet (4.6 meter)	133	E8	1
CBLH061KP	20 feet (6.1 meter)	223	E8	2
CBLH091KP	30 feet (9.1 meter)	341	E8	3
CBLH152KP	50 feet (15.2 meter)	447	E8	3
CBLH229KP	75 feet (22.9 meter)	492	E8	4
CBLH305KP	100 feet (30.5 meter)	610	E8	5

BALDOR

Series 15H, 18H, and 22H
Expansion and Accessory Boards

Baldor offers a wide variety of plug-in expansion boards for Series 15H Inverters, Series 18H or 22H Vector Drives and Series 19H or 20H DC Controls. Expansion boards allow the drive to be interfaced with various inputs and outputs. Each control has the capability to utilize up to two expansion boards. The following list shows boards available. The matrix shows which boards may be used together in the same control.

Board Number	Description	List Price	Mult. Sym.
ACB003A01	Isolated Input/2 Relay Output Accessory Board Contains 9 Isolated inputs for 90-130VAC. All inputs must be the same voltage. Also has 2 relay outputs, Form "C": N.O. and N.C. Accessory Board mounts in Expansion Board slot but uses wiring harness to connect to motor control card. Requires control board with onboard 24VDC power supply.	298	E8
EXB003A04	Isolated Input Board Contains 9 isolated inputs jumper configurable for 10-30 VAC or 10-30 VDC. All must be the same voltage - one side of all inputs is common. This board replaces the opto inputs on the main control board. Uses screw terminals for connection. (Use with Series 15H, 18H and 22H only)	235	E8
EXB003A05	Isolated Input Board Contains 9 isolated inputs jumper configurable for 90-130 VAC. All must be the same voltage - one side of all inputs is common. This board replaces the opto inputs on the main control board. Uses screw terminals for connection. (Use with Series 15H, 18H and 22H only).	235	E8
EXB004A01	Four Output Relays / 3-15 PSI Pneumatic Interface Converts 3-15 PSI air pressure to 0-10 VDC or 10-0 VDC (inverted). Also has four relays, 2 of which are jumper selectable as N.O. or N.C., rated for 230VAC, 5 amps max and two form "C". Uses screw terminals for connections. Air hose connects to 1/8" O.D. nipple on board.	433	E8
EXB005A01	Master Pulse Reference / Isolated Pulse Follower–Bi-directional jumper selectable for: 1. Master quadrature pulse reference. Provides 5 volt quadrature A and B channel outputs with complements at a pulse rate proportional to accel-decel limited speed commands. Phase of B channel is reversed for reverse direction. 2. Master speed step-direction pulse reference. Provides 5 volt pulse and direction outputs with complements at a pulse rate proportional to accel-decel limited speed command. 3. Quadrature pulse follower. Provides opto isolated inputs for 5-15 volt quadrature A and B channel input speed commands and retransmits this input as 5 volt channel A and B outputs with complements at a pulse rate proportional to accel-decel limited speed command. Motor direction reverses with input channel phase reversal. 4. Speed step and direction pulse follower. Provides opto isolated inputs for 5-15 volt input pulse and direction. Commands and retransmits these inputs as 5 volt pulse and direction outputs with complements at a pulse rate proportional to accel-decel limited speed command.	368	E8
EXB006A01	DC Tachometer Interface Allows for DC tach input voltage for motor or process feedback Jumper selectable for input voltage with software trim for 10% tolerance. 250 VDC total maximum input voltage or can be used for one analog input with 16 bits resolution for ±10V and 15 bits resolution for 0-10 VDC input. Uses screw terminals for connection.	453	E8

Series 15H, 18H, 19H, 20H and 22H Expansion and Accessory Boards

Board No.	Description	List Price	Mult. Sym.
EXB007A02	High Resolution Analog Board Allows one input with up to 16 bits resolution. DC inputs: ± 10V, 0-10V, ± 5V, 0-5V, with 300 microvolt resolution. Current inputs: 4-20 mA, with 0.6 microamps resolution. Input / Resolution ± 10 V / 16 bit 0 - 10 V / 15 bit ± 5 V / 15 bit 0 - 5 V / 14 bit 4 - 20 mA / 15 bit Both the 0-10 V and 4-20 mA inputs may be inverted to 10-0 V and 20-4 mA. Two outputs, each with ± 10 VDC, 0-10 VDC or 4-20 mA with inverting capability. This replaces the analog outputs on the main control board. Uses screw terminals for connection.	599	E8
EXB008A01	Isolated Encoder Feedback Board This board is recommended for use with motors that do not have an electrically isolated encoder (Baldor Vector drive motors have isolated encoders). Contains a 0-15 VDC (300mA) isolated power supply to allow use with 5, 12 and 15 VDC encoders by jumper selection. Isolates A, B and index channels with complements. The retransmitted encoder signals may be configured in two ways with a board level jumper as follows: 1. For 2 channel quadrature output (A and B with complements), set jumper to disable the marker channel (index pulse) as an input. 2. To use the marker channel (index pulse) as an input, jumper must be set to disable channel B (and compliment) output. Retransmitted signals will always be 5 VDC differential. Uses screw terminals for connection.	632	E8
EXB010A01	Two analog output/three relay output board. Provides two isolated analog outputs each with 0-5VDC, 0-10VDC, or 4-20mA capability. Also includes three relay outputs jumper selectable for N.O. or N.C. rated for 230VAC, 5 amps maximum. Uses screw terminals for connection.	368	E8
EXB012A01	RS232 and RS485 High Speed Serial Communications Allows Series 15H and 18H controls to be connected to RS232 half and full duplex and isolated RS485 half duplex,230.4K Baud maximum. Uses DB-9 connector for RS232 and screw terminals for RS485.	235	E8
EXB013A01	DeviceNet Expansion Board Allows Series 15H and 18H controls to be connected to DeviceNet Communications Bus. Uses plug in terminals for connection	619	E8
EXB014A01	Profibus DP Expansion Board Allows Series 15H and 18H controls to be connected to Profibus Communications Bus. Uses plug in terminals for connection	745	E8
EXB015A01	Modbus plus Expansion Board Allows Series 15H and 18H controls to be connected to Modbus Communications Bus. Uses plug in terminals for connection	891	E8

Notes on Mounting

Expansion Boards plug into a slot inside the control. When using one expansion board either a Group 1 or 2 board will connect by a connector on the side of the board. When two expansion boards are used one must be from Group 1 and one from Group 2.

Accessory Boards can mount into either a Group 1 or Group 2 slot. When using an Accessory Board only one other Expansion Board may be used.

Group 1 Boards

Isolated Input Board
EXB003A04
EXB003A05

Master Pulse Reference/Isolated Pulse Follower
EXB005A01

DC Tachometer Interface
EXB006A01

Isolated Encoder Feedback
EXB008A01

Group 2 Boards

Four Output Relays /3-15 PSI Pneumatic Interface
EXB004A01

High Resolution Analog Board
EXB007A02

Two analog output/three relay outputs
EXB010A01

RS232/RS485 High Speed Serial Communication
EXB012A01

DeviceNet Communication
EXB013A01

Profibus DP Communication
EXB014A01

Modbus Plus Communication
EXB015A01

BALDOR

AC and DC Drives Options and Accessories

Recommendations for Using Isolation Transformers

Baldor Solid-State Drives are designed to operate from industrial power lines with normal AC line conditions without the need of an isolation transformer, but the following benefits of isolation transformers should be considered:

1. Local codes may require a transformer.
2. Where environmental conditions subject the drive (particularly the motor) to distinct possibility of accidental or partial grounding.
3. Transformer isolates the Drive circuitry from plant AC line voltage adding increased reliability.
4. The transformer will help prevent AC line voltage transients from reaching the drive circuitry.
5. Transformers are often helpful in limiting the effect of line notches on the distribution system.
6. The transformer will limit the available fault current to the controller.
7. Interaction between several controllers operating from the same power source can be reduced or eliminated.
8. Individual isolation transformers add additional impedance for controller protection when operating from a large power distribution transformer.

Specifications

- NEMA 1 ventilated enclosure.
- Aluminum windings.
- Single-phase, 60 Hz
- 150º C temperature rise
- Class H insulation dry type construction.
  Windings: delta primary and wye secondary. (Occasionally a specific design may be delta-delta.)
- Transformers are manufactured in the U.S.A. for use in the U.S.A. only. For transformers manufactured elsewhere, or shipped outside the U.S.A. refer to your Baldor District Office.

Single-Phase Isolation Transformers (60 Hz) (UL Listed)

DC Drive Hp	AC Drive Hp	KVA	Secondary Voltage	Primary Voltage						Mult. Sym.
				115/230 VAC		230/460 VAC		575 VAC		
				Part No.	List	Part No.(2)	List	Part No.(2)	List	
—	—	0.5	115/230	—	—	77530-16A	$439	77530-17A	$529	
1/4-1/3	—	0.75	115/230	—	—	✻ 77530-16B	561	77530-17B	658	E8
—	—	1	115/230	—	—	77530-16C	663	77530-17C	822	
1/2-3/4	—	1.5	115/230	✻ 77530-15D	$822	✻ 77530-16D	822	✻ 77530-17D	1030	
1	—	2	115/230	—	—	✻ 77530-16E	1068	77530-17E	1239	E8
1-1/2	1/3/01	3	115/230	—	—	✻ 77530-16F	1332	77530-17F	1589	
2	—	1-1/2 - 2	115/230	—	—	✻ 77530-16G	2076	✻ 77530-17G	1732	
3-5	—	3	115/230	—	—	✻ 77530-16H	2470	✻ 77530-17H	1876	E8
7.5	—	—	230	—	—	77530-16J	2879	77530-17J	4494	

(1) No part number assigned. Order by KVA, input voltage and output voltage.
(2) For dimensions refer to page 109
✻ Normally carried in stock

For other optional features contact your local Baldor District Office.

AC and DC Drives Options and Accessories

Three-Phase Drive Transformer KVA Selection Chart

Drives HP Rating	DC Drives	AC Drives		
	230 or 460 VAC Input	230 VAC Input	460 VAC Input	575 VAC Input
	KVA	KVA	KVA	KVA
1/3-1		7.5	7.5	—
1-1/2 - 2	7.5	7.5	7.5	—
3	7.5	7.5	7.5	7.5
5	7.5	11	11	7.5
7-1/2	11	15	11	15
10	15	20	15	15
15	20	27	27	—
20	27	34	27	—
25	34	34	34	—
30	40	51	40	—
40	51	63	51	—
50	63	63	75	—
60	75	93	93	—
75	93	118	118	—
100	118	118	145	—
125	145	—	175	—
150	175	—	220	—
200	220	—	275	—
250	275	—	275	—
300	330	—	330	—
350-400	440	—	440	—
500	550	—	—	—
600	660	—	—	—
700	750	—	—	—
800	870	—	—	—
900	—	980	—	—
1000	—	1080	—	—
1250	—	1350	—	—
1500	—	1620	—	—

BALDOR

AC and DC Drives Options and Accessories

Specifications

- NEMA 1 ventilated enclosure.
- Aluminum windings.
- 3-phase, 60 Hz.
- 150º C temperature rise.
- Class H insulation dry type construction.
- + 5% Taps (standard)
- Windings, delta primary and wye secondary. (Occasionally a specific design may be delta-delta.)
- Transformers are manufactured in the U.S.A. for use in the U.S.A. only. For transformers manufactured elsewhere, or shipped outside the U.S.A. refer to your local Baldor District Office.

Three-Phase Isolation Transformers (60 Hz) (UL listed)(2)

KVA(3)	List	Mult. Sym.	230 VAC Secondary			460 VAC Secondary			575 VAC Secondary
			230 VAC Primary	460 VAC Primary	575 VAC Primary	230 VAC Primary	460 VAC Primary	575 VAC Primary	575 VAC Primary
			417104-11	417104-10	417104-14	417104-13	417104-12	417104-15	—
7.5 (2)	1805		R	✻ R	R	R	R	R	
11 (2)	2221	E8	S	✻ S	S	S	S	S	(1)
15	2348		T	✻ T	T	T	T	T	
20	2747		V	✻ V	V	V	V	V	
27	3183	E8	W	✻ W	W	W	W	W	(1)
34	3503		X	✻ X	X	X	X	X	
40	3680		Y	✻ Y	Y	Y	Y	Y	
51	4093	E8	RB	RB	RB	RB	RB	RB	(1)
63	4962		RC	RC	RC	RC	RC	RC	
75	5651		RD	RD	RD	RD	RD	RD	
93	6470	E8	RE	RE	RE	RE	RE	RE	(1)
118	7592		RF	RF	RF	RF	RF	RF	
145	8755		RG	RG	RG	RG	RG		
175	10559	E8	RH	RH	RH	RH	RH	(1)	(1)
220	12354		RJ	RJ		RJ	RJ		
275	14689		RK	RK		RK	RK		
330	18155	E8	RL	RL	(1)	RL	RL	(1)	(1)
440	23989		RM	RM		RM	RM		
550	30986		RN	RN		RN	RN		
660	34952	E8	RP	RP	(1)	RP	RP	(1)	(1)
750	37359		RR	RR		RR	RR		
870	49587		RS	RS		RS	RS		
980	61722	E8	RT	RT	(1)	RT	RT	(1)	(1)
1,080	72484		RV	RV		RV	RV		
1,350	87579	E8	RW	RW	(1)	RW	RW	(1)	(1)
1,620	102890		RX	RX		RX	RX		

(1) No Part Number assigned, order by KVA, Input Voltage, Output Voltage.

(2) See page 107 for HP/kVA sizing instructions; see page 109 for dimensions.

✻ Normally carried in stock.

For other optional features, contact your local Baldor District Office.

AC and DC Drives Options and Accessories

Single-phase Transformer Dimensions and Weights [1]

KVA	Maximum Dimensions (in/mm)			Net Wt. lb (kg)
	Height	Width	Depth	
0.75	8.3/210	6/152	5.5/139	20 (9)
1	8.3/210	6/152	5.5/139	26 (12)
1.5	9.5/241	6.3/160	6.1/154	36 (16)
2	10.5/266	6.3/160	6.1/154	40 (18)
3	14.2/360	7.5/190	7.7/195	48 (22)
5	15.7/398	9.3/236	9/228	75 (34)
10	19/482	12/304	10.6/269	128 (58)
15	16.9/429	14.1/358	11.6/294	170 (77)

Three-phase Transformer Dimensions and Weights[1]

KVA	Maximum Dimensions (in/mm)			Net Wt. lb (kg)
	Height	Width	Depth	
7.5	29/736	22/558	13/330	175 (79)
11	32/812	22/558	13/330	190 (86)
15	25/635	22/558	17/431	225 (102)
20	28/711	24/609	17/431	300 (136)
27	32/812	25/635	22/558	390 (177)
34	33/838	27/685	22/558	435 (197)
40	33/838	27/685	23/584	450 (204)
51	35/889	28/711	23/584	500 (226)
63	39/990	33/838	28/711	575 (260)
75	39/990	33/838	28/711	750 (340)
93	44/1117	37/939	30/762	800 (363)
118	46/1168	38/965	30/762	850 (386)
145	46/1168	40/1016	30/762	1010 (458)
175	50/1270	47/1193	28/711	1150 (522)
220	50/1270	48/1219	35/889	1385 (628)
275	56/1422	48/1219	35/889	1695 (769)
330	61/1549	56/1422	41/1041	1750 (794)
440	66/1676	56/1422	45/1143	2300 (1043)
550	72/1828	60/1524	45/1143	2725 (1236)
650	75/1905	64/1625	47/1193	3300 (1497)
750[2]	75/1905	68/1727	48/1219	3800 (1723)

(1) **Note:** Transformers are purchased from several vendors. Dimensions for the same KVA rating may vary from one supplier to another, but will not exceed the maximum envelope as shown in above tabulations. Actual dimensions will be supplied on request for each order.

(2) For KVA above 750 contact Baldor for dimensions and weight.

BALDOR

Three Phase - Line and Load Reactors

1 thru 500 Hp

Applications: Line side power conditioning for AC motor controls to prevent unwanted harmonics and nuisance drive trips. Load side power conditioning to smooth power wave form to connected motor to reduce motor electrical stresses and increase motor life.

Features: Open construction with connection terminals.
3% impedance rating at rated current.

Hp	kW	Input Voltage	Rated Amps	Induct. (mH)	Full Load Watts Loss	Catalog Number	List Price	Mult. Sym.	Approx. Shpg. Wgt.
208/230 Volt input, 60 Hz, 3% Impedance									
1	0.75	230	4	3.0	9	**LRAC00401**	292	E8	9
1 1/2-2	1.15-1.5	208/230	8	1.15	14	**LRAC00801**	292	E8	3
3	2.2	208/230	12	1.25	26	**LRAC01201**	472	E8	10
5	3.7	208/230	18	0.8	36	**LRAC01801**	495	E8	4
7 1/2	5.5	208/230	25	0.5	48	**LRAC02501**	595	E8	11
10	7.4	208/230	35	0.4	49	**LRAC03501**	631	E8	19
15	11.1	230	45	0.3	54	**LRAC04501**	665	E8	23
20	14.9	230	55	0.25	64	**LRAC05501**	706	E8	25
25	18.6	208/230	80	0.138	105	**LRAC080BTB**	824	E8	31
30	22.3	208/230	110	0.1	95	**LRAC110BCB**	1,069	E8	39
40	29.8	208/230	130	0.085	117	**LRAC130BCB**	1,434	E8	30
50	37.2	208/230	160	0.069	127	**LRAC160BCB**	1,667	E8	47
460 Volt input, 60 Hz, 3% Impedance									
1-1 1/2	0.75-1.1	460	2	12.0	7.5	**LRAC00201**	246	E8	4
2	1.5	460	4	6.5	20	**LRAC00402**	310	E8	4
3-5	2.2-3.7	460	8	3.0	29	**LRAC00802**	362	E8	7
7 1/2	5.5	460	12	2.5	31	**LRAC01202**	499	E8	9
10	7.4	460	18	1.5	43	**LRAC01802**	522	E8	10
15	11.1	460	25	1.2	52	**LRAC02502**	823	E8	13
20-25	14.9-18.6	460	35	0.8	54	**LRAC03502**	875	E8	15
30	22.3	460	45	0.7	62	**LRAC04502**	704	E8	27
40	29.8	460	55	0.5	67	**LRAC05502**	980	E8	29
50-60	37.2-44.7	460	80	0.4	120	**LRAC08002**	869	E8	33
75	56	460	110	0.2	140	**LRAC110ACB2**	1,130	E8	55
100	75	460	130	0.17	150	**LRAC130ACB2**	1,510	E8	54
125	93.2	460	160	0.13	300	**LRAC160ACB2**	1,759	E8	54
150	112	460	200	0.11	222	**LRAC200ACB**	2,059	E8	68
200	149	460	250	0.088	370	**LRAC360ACB2**	2,881	E8	127
250	186.5	460	360	0.061	470	**LRAC420ACB2**	3,069	E8	128
300	223.8	460	400	0.053	460	**LRAC420ACB2**	3,069	E8	128
350-400	261-298	460	480	0.046	740	**LRAC480ACB2**	4,675	E8	127
500	373	460	600	0.037	493	**LRAC600ACB**	5,649	E8	245
575 Volt input, 60 Hz, 3% Impedance									
1-2	0.75-1.5	575	2	20	11.3	**LRAC00202**	273	E8	4
3	2.2	575	4	9	20	**LRAC00403**	424	E8	4
5	3.7	575	8	3	25.3	**LRAC00802**	362	E8	7
7 1/2	5.5	575	8	3	29	**LRAC00803**	478	E8	10
10	7.5	575	12	2.5	31	**LRAC01202**	499	E8	9
15	11	575	18	1.50	43	**LRAC01802**	522	E8	10
20	15	575	25	1.20	52	**LRAC02502**	823	E8	13
30	22	575	35	0.80	54	**LRAC03502**	875	E8	15
40	30	575	45	0.70	62	**LRAC04502**	704	E8	27
50	37.2	575	55	0.5	67	**LRAC05502**	980	E8	29
60-75	44.7-56	575	80	0.4	120	**LRAC08002**	869	E8	33
100	75	575	110	0.20	140	**LRAC110ACB2**	1,130	E8	55
125	93	575	130	0.17	150	**LRAC130ACB2**	1,510	E8	54
150	112	575	160	0.13	300	**LRAC160ACB2**	1,759	E8	54

2.5% impedance rating. % impedance decreases if load current is less than reactor rated current.

Three Phase - Line and Load Reactors

Hp (Rated)	kW (Rated)	Input Voltage	Rated Amps	Induct. (mH)	Full Load Watts Loss	Catalog Number	List Price	Mult. Sym.	Approx. Shpg. Wgt.
200-240 Volt input, 50 Hz, 3% Impedance									
1	0.75	240	4	3.0	14.5	**LRAC00401**	292	E8	9
1 1/2-2	1.1-1.5	200/240	8	1.15	19.5	**LRAC00801**	292	E8	3
3	2.2	200/240	12	1.25	26	**LRAC01201**	472	E8	10
5	3.7	200/240	18	0.8	36	**LRAC01801**	495	E8	4
7 1/2	5.5	240	25	0.5	48	**LRAC02501**	595	E8	11
10	7.5	200/240	35	0.4	49	**LRAC03501**	631	E8	19
15	11.1	240	45	0.3	54	**LRAC04501**	665	E8	23
20	14.9	240	55	0.25	64	**LRAC05501**	706	E8	25
25	18.6	200/240	80	0.2	105	**LRAC080BTB**	824	E8	31
30	22.3	200/240	110	0.1	95	**LRAC110BCB**	1,069	E8	39
40	29.8	200/240	130	0.085	117	**LRAC130BCB**	1,434	E8	30
50	37.2	200/240	160	0.069	127	**LRAC160BCB**	1,667	E8	47
380/400/415 Volt input, 50 Hz, 3% Impedance									
1	0.75-1.1	380	2	12.0	7.5	**LRAC00201**	246	E8	4
1	0.75	400/415	2	20.0	11.3	**LRAC00202**	273	E8	4
2	1.5	380	4	6.5	20	**LRAC00402**	310	E8	4
2	1.5	400/415	4	9.0	20	**LRAC00403**	424	E8	4
3	2.2	380/400/415	8	5.0	25.3	**LRAC00802**	362	E8	7
5	3.7	380/400/415	8	3.0	29	**LRAC00803**	478	E8	10
7 1/2	5.5	380/400/415	12	2.5	31	**LRAC01202**	499	E8	9
10	7.5	380/400/415	18	1.5	43	**LRAC01802**	522	E8	10
15	11.1	380/400/415	25	1.2	52	**LRAC02502**	823	E8	13
20	14.9	380/400/415	35	0.8	54	**LRAC03502**	875	E8	15
25-30	18.6-22.3	380/400/415	45	0.7	62	**LRAC04502**	704	E8	27
40-50	29.8-37.2	380/400/415	80	0.4	120	**LRAC08002**	869	E8	33
60-75	44.7-56	380/400/415	130	0.17	150	**LRAC130ACB2**	1,510	E8	54
100	75	400/415	160	0.13	300	**LRAC160ACB2**	1,759	E8	54
125	93	380/400/415	200	0.11	222	**LRAC200ACB**	2,059	E8	68
150-200	112-149	380/400/415	250	0.88	370	**LRAC250ACB2**	2,686	E8	128
250	186.2	380/400/415	360	0.061	470	**LRAC360ACB2**	2,881	E8	127
300	223.8	380/400/415	420	0.053	460	**LRAC420ACB2**	3,069	E8	128
350-400	261-298	380/400/415	480	0.046	493	**LRAC480ACB2**	4,675	E8	127

Line Reactor Enclosures NEMA 1

Enclosure Catalog No.	To Fit LRAC Catalog No.		Mount Type	List Price	Mult. Sym.	Approx. Shpg. Wgt. (Lbs)	Width (IN/mm)	Height (IN/mm)	Depth (IN/mm)
LRENC-8	**LRAC002-4XX**	**LRAC01801**							
	LRAC008-12XX	**LRAC01802**	WALL	184	E8	12	8 (293)	10 (254)	6 (152)
	LRAC01803	**LRAC08002**							
LRENC-13	**LRAC025-35XX**		FLOOR	362	E8	16	13 (330)	15 (381)	13 (330
	LRAC045-55XX								
LRENC-15	**LRAC080XTB**	**LRAC110-160XX**							
	LRAC0110-500XX		FLOOR	544	E8	35	15 (381)	16 (406)	13 (330)
LRENC-20S	**LRAC200-250XCB**	**LRAC250-900ACB**	FLOOR	729	E8	50	20 (508)	19 (483)	16 (406)

BALDOR

Digital Speed Potentiometer with Display

Baldor's microprocessor-based digital speed potentiometer with LED display of set speed may be used to replace the conventional 3-wire analog speed pot for most AC and DC drives. Desired set speed may be entered into the large 1/2" LED display by pressing the "up" and "down" push buttons: one digit at a time or in a fast sweep. Display shows 0.1% increments of full motor speed (0-100%).

Specifications

Temperature	-10°C to +45°C
AC input voltage	85-264 VAC
Input frequency	50/60 Hz
Supply voltage applied across output	5 VDC to 15 VDC
Speed regulation	Same as driven unit
Input impedance to DSP4 will drive	500 ohm to 100 K ohm
Output	Isolated 3-wire pseudo-pot (normal or inverted output)
Display settings	0-100% of set speed range in 0.1% increments (resolution of 1000)
Non-volatile memory	Retains last set point upon loss of AC power (user selectable via dip switch settings)

Catalog Number	Description	List Price	Mult. Sym.	Approx. Shpg. Wgt.	Input Voltage
DSP4-6	Digital Speed Potentiometer with Display	509	E9	2	120/240 VAC 50/60 Hz

Field Programmable Digital Tachometer for Rate and Time with Display

Baldor offers an economical micro-processor-based digital tachometer capable of measuring motor speeds as low as 1 RPM. Unit is field programmable for desired user specified units: RPM, FPM and GPM.

Specifications

Temperature	-10°C to +45°C
AC input voltage	85-264 VAC
Input frequency	50/60 Hz
Input pulse rate	1 to 30,000 input pulses per minute
Resolution	From 0.01 RPM
Accuracy	±0.04% display update every pulse or 0.5 seconds, whichever is longer
Isolated high/low alarm output	5 amp 240 VAC max.
Transducer signal input	0-5 to 0-24 VDC square wave (hall-effect, photoelectric, magnetic or any TTL NPN open collector device.)

Catalog Number	Description	List Price	Mult. Sym.	Approx. Shpg. Wgt.	Input Voltage
DTM8000-6	Digital Tachometer for Rate & Time with Display	578	E9	1	120/240 VAC 50/60 Hz

BALDOR

Remote Operator Control Stations

Baldor offers a variety of remote operator's control stations to meet the needs of most AC or DC drive applications. A unique feature of the controls is the choice of non-maintained or maintained stop push button functions. Other standard features include:

- Convenient easy-to-connect terminal blocks. Numbered/indicated contacts;
- UL listing. Optional features include: 5K ohm speed potentiometer; run/jog selector switch or push button; forward/reverse selector; auto/manual selector switch; and hand-off-auto selector switches.

Start Push Button	Stop Push Button (a)	5K Speed Pot	Run-Jog Switch	Jog Push Button	Fwd-Rev Switch	Hand-Auto Switch	Hand-Off-Auto Switch	Catalog Number	List Price	Mult. Sym.	Approx. Shpg. Wgt.	Dimensions		
												Height in (mm)	Width in (mm)	Depth in (mm)
NEMA 1, 3R, 4, 4X and 12 Remote Operator Stations														
X	NM							**9C80**	243	E8	1	5 (128)	2.9 (74)	2.5 (64)
X	M							**9C81**	243	E8	1	5 (128)	2.9 (74)	2.5 (64)
X	NM	X						**9C90**	302	E8	1	6.6 (167)	2.9 (74)	2.5 (64)
X	M	X						**9C91**	302	E8	1	6.6 (167)	2.9 (74)	2.5 (64)
X	NM	X	X					**9C200**	363	E8	1	8.1 (207)	2.9 (74)	2.5 (64)
X	M	X	X					**9C201**	363	E8	2	8.1 (207)	2.9 (74)	2.5 (64)
X	NM	X				X		**9C210**	465	E8	1	8.1 (207)	2.9 (74)	2.5 (64)
X	M	X				X		**9C211**	465	E8	2	8.1 (207)	2.9 (74)	2.5 (64)
X	NM	X					X	**9C220**	465	E8	1	8.1 (207)	2.9 (74)	2.5 (64)
X	M	X					X	**9C221**	465	E8	2	8.1 (207)	2.9 (74)	2.5 (64)
X	NM	X	X			X		**9C230**	636	E8	2	11.3 (287)	2.9 (74)	2.5 (64)
X	M	X	X			X		**9C231**	636	E8	2	11.3 (287)	2.9 (74)	2.5 (64)
X	NM	X		X				**9C240**	404	E8	1	8.1 (207)	2.9 (74)	2.5 (64)
X	M	X		X				**9C241**	404	E8	2	8.1 (207)	2.9 (74)	2.5 (64)
X	NM	X	X		X			**9C300**	454	E8	2	11.3 (287)	2.9 (74)	2.5 (64)
X	M	X	X		X			**9C301**	454	E8	2	11.3 (287)	2.9 (74)	2.5 (64)
X	NM	X			X	X		**9C310**	646	E8	2	11.3 (287)	2.9 (74)	2.5 (64)
X	M	X			X	X		**9C311**	646	E8	5	11.3 (287)	2.9 (74)	2.5 (64)
X	NM	X			X		X	**9C320**	606	E8	2	11.3 (287)	2.9 (74)	2.5 (64)
X	M	X			X		X	**9C321**	606	E8	2	11.3 (287)	2.9 (74)	2.5 (64)
X	NM	X	X		X	X		**9C330**	676	E8	2	11.3 (287)	2.9 (74)	2.5 (64)
X	M	X	X		X	X		**9C331**	676	E8	2	11.3 (287)	2.9 (74)	2.5 (64)
X	NM	X		X	X			**9C340**	445	E8	2	11.3 (287)	2.9 (74)	2.5 (64)
X	M	X		X	X			**9C341**	445	E8	2	11.3 (287)	2.9 (74)	2.5 (64)
NEMA 7/9 Explosion Proof Remote Operator Stations														
X	NM	X	X					**9C17**	2,260	E8	15	5.3 (134)	10.6 (269)	3.3 (84)
X	M	X	X		X			**9C16**	2,421	E8	12	5.3 (134)	14.1 (258)	3.3 (84)

NOTE: (a) M = Maintained (Stop button contact remains open after stop button is depressed. To restart the drive, the stop button must be depressed before the start button.)
NM = Non-Maintained (Stop button contact momentarily opens and stops the drive. The contact then closes allowing the drive to be started when the start button is depressed.)

DC Drives Selection Chart

Single Phase DC	Three Phase DC	
BC	**Series 19H Non-Regen**	**Series 20H Regen**
Main Attributes		
29 models to choose from with extensive list of available options to fit greatest range of applications	Digital DC Drive with standard armature voltage feedback or built in encoder feedback capability. Many options available include high resolution analog input and digital output boards.	
Hp Range		
1/100 thru 5	5 thru 300	
Voltage Range		
115/230 1-phase	230/460 3-phase	
Enclosure Selection		
Chassis, NEMA 1, NEMA 4X	Chassis	
Speed Control		
Armature voltage or Tach	Armature voltage or Encoder feedback, standard	
Speed Regulation		
1% of base speed, 1% of set speed with tach feedback	1% of base speed, 0.1% of set speed with encoder feedback	
Speed Range		
20:1 or 50:1	100:1 based on top speed and feedback type	
Communications Options		
None	RS-232 Serial, RS-422/485, Device Net, Modbus Plus, Profibus DP.	
Operator Interface		
Local analog controls on enclosed models; analog and discrete remote control.	Local keypad / display. 2 lines X 16 characters backlit LCD. 12 key membrane w/tactile response.	
Differentiating Feature		
HP range available from 1/100 through 5.	High peak overload rating up to 300%. 15 preset speeds. 9 assignable digital inputs.	

BALDOR®

Fractional Horsepower DC Speed Controls for PMDC Motors

1/15 thru 1/4 **115 VAC Single Phase 50/60 Hz.**

Applications: Conveyors, machine tools and other applications requiring adjustable speed.

Features: Simple DC motor control with built-in circuit breaker, center lock reversing switch (center off), on/off switch, 7 foot SJO oil resistant cord, and variable voltage transformer for manual speed adjustment. NEMA 1 enclosure is standard. CSA list file # LR54532.

Max Hp	Catalog Number		List Price	Mult Sym.	Approx. Shpg. Wgt.	Amp Capacity	Input Voltage
1/15	**BC110**	◊	490	E9	5	1.0	115VAC
1/8	**BC115**	◊	523	E9	6	1.5	115VAC
1/4	**BC130**	◊	666	E9	10	3.0	115VAC

NEMA 1 Enclosed DC Controls for PMDC and Shunt Wound Motors

BC140 ENCLOSED (NEMA 1)

1/100 thru 2 Hp **115/230 VAC Single Phase 50/60 Hz.**

Applications: General purpose industrial use with permanent magnet or shunt wound DC motors.

Features: SCR controls have a free-wheeling diode and feature adjustable accel, decel, current limit, IR comp, min. and max speed pots to match applications. The anti-demag feature protects PM motors and helps protect the SCR power bridge against direct shorts. The controls have US and Canadian UL component recognition.

A Plug-in Horsepower Resistor® and armature fuse must be ordered and installed in BC138, BC139, BC140, BC140-FBR, BC141 and BC142.

Hp Range	Catalog Number		List Price	Mult. Sym.	Approx. Shpg. Wgt. Lbs.	Input Voltage
1/100-1/3	**BC138**	◊	194	E9	1	115
1/50-3/4	**BC139**	◊	194	E9	1	230
1/100-2 (a) (b)	**BC140**	◊	329	E9	3	115/230
1/100-2 (a) (c)	**BC140-FBR**	◊	455	E9	3	115/230

NOTE: (a) 1 Hp at 115V and 2 Hp at 230V requires BC143 heatsink kit. FBR=Forward/Brake/Reverse.
(b) BC24-LF, BC143 and BC144 options available for BC140.
(c) BC24-LF and BC143 only options available for BC140-FBR.

DC Control Accessories

Catalog Number		Description	List Price	Mult. Sym.	Approx. Shpg. Wgt.
BC24-LF	◊	Ac Line Filter for use with CE Applications	66	E9	1
BC143	◊	External Heatsink Kit (BC140, BC140-FBR, BC141, BC142, BC204)	63	E9	2
BC144	◊	Forward-Brake-Reverse Switch Kit for BC140	110	E9	1
BC145	◊	Signal Isolator Board	187	E9	1
BC146	◊	Current Sensing Relay/Overload Protector	121	E9	1
BC147	◊	Barrier Terminal Board (BC141 and BC142)	26	E9	1
BC148	◊	Replacement Potentiometer Kit (5K ohm)	11	E9	1
BC149	◊	Knob and Dial Kit	12	E9	1
BC152	◊	Barrier Terminal Board With Signal Isolator (BC141 and BC142)	172	E9	1
BC218	◊	DIN-rail mounting kit for BC141, BC142 or BC204	31	E9	1

NOTE: BC24-LF is an AC line filter required for applications where CE is required if the control is not filtered elsewhere in the application. This filter may be used on most 115 or 230 VAC, single phase applications where CE is required.

◊ Stock Model Numbers

Chassis Mount DC Controls

1/100 thru 1.5 Hp **115 VAC Single Phase 50/60 Hz.**
1/50 thru 5 Hp **230 VAC Single Phase 50/60 Hz.**

BC141 / BC142

Applications: General purpose industrial use with permanent magnet or shunt wound DC motors.

Features: Chassis-mount SCR controls have a free-wheeling diode and feature adjustable accel, decel, current limit, IR comp, min and max speed pots to match applications. The anti-demag feature protects PM motors and helps protect the SCR power bride against direct shorts. The controls have US and Canadian UL component recognition.

Hp Range	Catalog Number		Description Input Voltage / Max. Hp	List Price	Mult. Sym.	Approx. Shpg. Wgt.	Input Voltage
1/100-1 1/2 [a]	**BC141**	◊	Standard Model, single voltage	180	E9	1	115
1/100-1 1/2	**BC141-SIH**		BC141 with BC152 Signal Isolator and BC143 Heatsink factory installed	425	E9	2	115
1/100-3 [a]	**BC142**	◊	Standard Model, single voltage	180	E9	2	230
1/100 - 3	**BC142-SIH**		BC142 with BC152 Signal Isolator and BC143 Heatsink factory installed	445	E9	2	230
1/100-1 1/2 [a] 1/50-3	**BC142-5**	◊	Dual voltage, without fuse holders	200	E9	1	115/230
1/100 - 1 1/2 [a] 1/50 - 3	**BC142-6**	◊	Standard Model, dual voltage	199	E9	1	115/230
1/100 - 1 1/2 1/50 - 3	**BC142-6-SIH**		BC142-6 with BC152 signal isolator board and BC143 heatsink factory installed	445	E9	1	115/230
5	**BC155**	◊	230V - 5 Hp	588	E9	5	230

NOTE: Above controls include 5k speed potentiometer.
(a) 1-1.5 Hp at 115 Volts and 2-3 Hp at 230 Volts, requires BC143 Heatsink kit.
BC155 Includes integral heatsink.
◊ Stock Model Numbers

BALDOR

Plug-in Horsepower Resistor and Fuse Kit

A Plug-in Horsepower Resistor® and armature fuse must be ordered and installed in BC138, BC139, BC140, BC140-FBR, BC141 and BC142.

These should be selected based on the motor's **rated current**. The price of the Hp resistor and fuse is included in the BC138, BC139, BC140, BC140-FBR, BC141 and BC142 list price. See selection below for catalog number.

Spare resistor kits are available for $9.00 list, **E9** multiplier.

Motor Hp Armature Voltage		Plug-In Hp Resistor Resistance Value (Ohms)	Catalog Number		Approx. DC Current (Amps)	DC Fuse Rating For Armature
90-130V	180V					
1/100	1/50	1.0	**BR1000**	◊	0.20	0.5
1/50	1/25	0.51	**BR0510**	◊	0.30	0.5
1/30	1/15	0.35	**BR0350**	◊	0.33	0.5
1/20	1/10	0.25	**BR0250**	◊	0.5	0.75
1/15	1/8	0.25	**BR0251**	◊	0.8	1.0
1/12	1/6	0.18	**BR0180**	◊	0.85	1.25
1/8	1/4	0.1	**BR0100**	◊	1.3	2.0
1/6	1/3	0.1	**BR0101**	◊	2.0	2.5
1/4	1/2	0.05	**BR0050**	◊	2.5	4.0
1/3	3/4	0.035	**BR0035**	◊	3.3	5.0
1/2	1	0.025	**BR0025**	◊	5.0	8.0
3/4	1 1/2	0.015	**BR0015SP**	◊	7.5	12.0
1 (a)	2 (a)	0.01	**BR0010SP**	◊	10	15.0
1 1/2 (a)	3 (a)	0.006	**BR0006**	◊	15	25.0 (b)

NOTE: (a) External Heatsink required. (b) Also used with AC Line Fuse. For AC line fuse rating see manual.

◊ Stock Model Numbers

NEMA 4X DC Control

1/4 thru 2 Hp **115/230 VAC** **Single Phase 50/60 Hz.**
3 Hp **230 VAC** **Single Phase 50/60 Hz.**

Applications: Constant torque, new or replacement.

Features: BC154, BCWD140 and BC160 are non-regen controls with reversal by means of switching the armature leads (BCWD140 has a forward/brake/reverse switch mounted). BC254 is a line regenerative SCR control that can drive the motor to a timed stop. BC354 is a PWM control that provides low-ripple DC power to the motor allowing more Hp when used with a 130 or 260 VDC motor. All offer a choice of armature or tachometer feedback and a speed or torque mode. No Hp resistors are needed for these controls, current is jumper selectable. BC154, BC160, BC254 and BC354 are painted black and come with a start-stop switch. BCWD140 comes with white epoxy paint and also forward/brake/reverse and run-jog switches. See pages 121-122 for features.

Hp Range	Catalog Number		Description Input Voltage / Max. Hp	List Price	Mult. Sym.	Approx. Shpg. Wgt.	Input Voltage
			NEMA 4X SCR (black)				
1/4-2	**BC154**	◊	Standard model - 120V - 1 Hp, 230V - 2 Hp	416	E9	5	115/230
	BC154-P	◊	BC154 with POWER SWITCH instead of START/STOP SW.	416	E9	5	115/230
	BC154-R	◊	BC154 with BC156 - FBR Switch factory installed	550	E9	5	115/230
	BC154-SI	◊	BC154 with BC145 Signal Isolator Board and BC158 Auto/Man Switch kit factory installed	670	E9	5	115/230
3	**BC160**	◊	230V - 3 Hp	479	E9	3	230
			NEMA 4X Washdown Duty SCR (white)				
1/4-2	**BCWD140**	◊	120V - 1 Hp, 230V - 2 Hp	557	E9	6	115/230
			NEMA 4X Washdown Duty Line Regen SCR (black)				
1/8-2	**BC254**	◊	120V - 1 Hp, 230V - 2 Hp (a)	600	E9	5	115/230
	BC254-FBR	◊	BC254 with BC253 FWD-BRAKE-REV switch factory installed	630	E9	5	115/230
			NEMA 4X Washdown Duty PWM DC (black) (b)				
1/4-2	**BC354**	◊	120V - 1 Hp, 230V - 2 Hp	645	E9	5	115/230

NOTE: (a) See page 120 for BC254 accessories.
(b) Output current is 7.5 amps; Output voltage is 130VDC for 115VAC input - 260VDC for 230VAC input. Motors designed for these voltages will give the best performance.

DC SCR NEMA 4X DC Control Accessories

Catalog Number		Description	List Price	Mult. Sym.	Approx. Shpg. Wgt.
BC153	◊	Electronic Forward-Dynamic Brake-Reverse Kit for BC154, BC354	198	E9	1
BC156	◊	Mechanical Forward-Dynamic Brake-Reverse Switch for BC154, BC354	128	E9	1
BC157	◊	Run/Jog switch for BC154 & BC160, BC354	23	E9	1
BC158	◊	Auto/Manual Installation Kit for BC145 signal isolator for BC154, BC160, BC354	53	E9	1
BC159	◊	AC Line Switch Kit for BC154, BCWD140, BC254, BC354	28	E9	1
BC145	◊	Signal Isolator Board	187	E9	1

NOTE: BC159 AC Line Switch Kit is factory installed on BC154, BC164, BCWD140, BC354. Listed here as replacement or spare parts.

◊ Stock Model Numbers

BALDOR

Line Regenerative DC Control

1/4 thru 3 Hp **115/230 VAC** **Single Phase 50/60 Hz.**
5 Hp **230 VAC** **Single Phase 50/60 Hz.**

Applications: Frequent start/stop/reverse applications or where controlled braking is required.

Features: Single phase line regenerative open chassis control to operate permanent magnet or wound field DC motors. These line regen controls are ideal for applications with overhauling loads. In torque mode, it can be used for tensioning applications. Several accessory boards are available to further customize the control. Includes 5k speed potentiometer. Jumper selectable current settings.

Hp Range	Catalog Number		Description Input Voltage / Max. Hp	List Price	Mult. Sym.	Approx. Shpg. Wgt.	Input Voltage
Line Regen SCR							
1/8-2 (a)	**BC204**	◊	120V 1 Hp, 230V 2 Hp, Standard Model	336	E9	3	115/230
	BC204-BPSI	◊	BC204 with BC215 Bi-polar Signal Isolator factory installed	434	E9	3	
1/4-2	**BC200**	◊	120V 1 Hp, 230V 2 Hp	628	E9	4	115/230
1/4-3	**BC201**	◊	120V 1-1/2 Hp, 230V 3 Hp	746	E9	1	115/230
5	**BC203**	◊	230V 5Hp	939	E9	10	230
NEMA 4X Washdown Duty Line Regen SCR							
1/8-2	**BC254**	◊	120V - 1Hp, 230V - 2Hp Standard Model	600	E9	5	115/230
	BC254-FBR	◊	BC254 with Power On/Off switch instead of Start/ Stop switch, and BC253. Forward-Brake-Reverse switch factory installed	630	E9	5	115/230

NOTE: (a) 1 Hp at 115 volts and 2 Hp at 230 volts requires BC143 heatsink kit.
◊ Stock Model Numbers

Line Regenerative DC Control Accessories

Catalog Number			Description	List Price	Mult. Sym.	Approx. Shpg. Wgt.
Accessories for BC200, BC201 and BC203						
BC212	(a)	◊	Bipolar signal isolator board	192	E9	1
Accessories for BC204						
BC143		◊	External Heatsink Kit	63	E9	2
BC215	(a)	◊	Bipolar signal isolator board	89	E9	3
BC216		◊	Multispeed board for BC204	68	E9	1
BC218		◊	DIN rail mounting kit	31	E9	1
Accessories for BC254						
BC245	(a)	◊	Bipolar signal isolator for BC254	189	E9	1
BC253		◊	Forward-Stop-Brake-Reverse Switch for BC254	23	E9	1
BC258		◊	Auto-manual Switch for BC254	53	E9	1
BC259		◊	AC Line Switch for BC254	23	E9	5

NOTE: (a) Voltage following mode only.
◊ Stock Model Numbers

NEMA Enclosed DC Control Specifications

Features	Catalog Number					
	BC138	**BC139**	**BC140 or BC140-FBR**	**BC154**	**BC160**	**BCWD140**
Enclosure	NEMA 1	NEMA 1	NEMA 1	NEMA 4X	NEMA 4X	NEMA 4X Washdown
Control Type	NEMA K	NEMA K	NEMA K	NEMA K	NEMA K	NEMA K
AC Line Input	115	230	115 230	115 230	230	115 230
DC Armature Voltage Nominal	90	180	90 180	90 180	180	90 180
Shunt Field Power Supply Voltage - DC	50/100	100/200	50/100 100/200	50/100 100/200	100/200	50/100 100/200
Rated Horsepower Range	1/100 - 1/3	1/50-3/4	1/100-1 1/50-2	1/50-1 1/25-2	3	1/50-1 1/25-2
External Heat Sink (BC143) Required	No	No	1 Hp 2Hp	Not Required	Not Required	Not Required
Speed Range (Motor May Be 20: 1 Constant Torque)	50:1	50:1	50:1	50:1	50:1	50:1
Adjustable Acceleration Time	Yes	Yes	Yes	Yes	Yes	Yes
Adjustable Deceleration Time	Yes	Yes	Yes	Yes	Yes	Yes
Minimum Speed Adjustable	Yes	Yes	Yes	Yes	Yes	Yes
Maximum Speed Adjustable	Yes	Yes	Yes	Yes	Yes	Yes
Current Limit Adjustable	Yes	Yes	Yes	Yes	Yes	Yes
Adjustable Current Limit and Trip Out Type	No	No	No	Timed or Non-Timed	Timed or Non-Timed	Timed or Non-Timed
Control Of Speed or Torque	Speed	Speed	Speed	Speed or Torque	Speed or Torque	Speed or Torque
IR Compensation Adjustable	Yes	Yes	Yes	Yes	Yes	Yes
Tachometer Feedback Input	No	No	No	Yes	Yes	Yes
Plug-In Horsepower Resistor ®	Required	Required	Required	N/A	N/A	N/A
UL & cUL Listing, CE	Yes	Yes	Yes	Yes	Yes	Yes
AC Line Fuse	Included	Included	Included	External	External	External
DC Armature Fuse	Included with Hp Resistor	Included with Hp Resistor	Included with Hp Resistor	Not Supplied with Control	External	Not Supplied with Control
Options						
AC Line Switch	Standard	Standard	Standard	Opt - BC159	No	Standard
Forward/Brake/Reverse Switch Mechanical Electronic	No No	No No	Opt-BC144 No	Opt-BC156 Opt-BC153	No No	Standard Opt-BC153
Run/Jog Switch	No	No	No	Opt-BC157	Opt-BC157	Standard
Input Signal Following Mode Capability Current (1-5, 4-20, 20-50mA) Voltage (0-25,0-120, VDC)	No	No	Opt-BC145 Opt-BC145	Internal Mount Opt-BC145 Standard (0-5,0-10 VDC)	Internal Mount Opt-BC145 Standard (0-5,0-10 VDC)	External Mount Opt-BC145 Standard (0-5,0-10 VDC)
Electrical Connection To Control Barrier Terminal Block	Standard	Standard	Standard	Standard	Standard	Standard
Current Sensing Relay/Overload Protector	No	No	Opt - BC146	Standard	Standard	Standard
AC Line Filter for CE	Opt-BC24-LF	Opt-BC24-LF	Opt-BC24-LF	Opt-BC24-LF	Opt-BC24-LF	Opt-BC24-LF

BALDOR

Chassis Mount DC Control Specifications

Features	Catalog Number							
	BC141	**BC142**	**BC142-6**	**BC155**	**BC204**	**BC200**	**BC201**	**BC203**
Enclosure	Chassis	Chassis	Chassis	Chassis	Chassis	Chassis	Chassis	Chassis
Control Type	NEMA K	NEMA K	NEMA K	NEMA K	Regenerative	Regenerative	Regenerative	Regenerative
AC Line Input	115	230	115 230	230	115 230	115 230	115 230	230
DC Armature Voltage Nominal	90	180	90 180	180	90 180	90 180	90 180	180
Shunt Field Power Supply Voltage - DC	50/100	100/200	50/100 100/200	50/100 100/200	50/100 100/200	50/100 100/200	100/200	100/200
Rated Horsepower Range	1/100-1.5	1/50-3	1/100-1 1/2 1/50-3	5	1/8-1 1/4-2	1/4-1 1/2-2	1/4-1-1/2 1/2-3	5
External Heat Sink (BC143) Required	1 Hp-Up	2 Hp-Up	1/2 Hp-Up 1 Hp-Up	Not Required	90V-1Hp 180V-2Hp	Not Required	Not Required	Not Required
Speed Range (Motor may be 20:1Constant Torque)	50:1	50:1	50:1	50:1	50:1	50:1	50:1	50:1
Adjustable Acceleration	Yes	Yes	Yes	Yes	Yes Fwd & Rev	Yes Fwd & Rev	Yes Fwd & Rev	Yes Fwd & Rev
Adjustable Deceleration	Yes	Yes	Yes	Yes	Regen	Regen	Regen	Regen
Min.. Speed Adjustable	Yes	Yes	Yes	Yes	No	No	No	No
Max. Speed Adjustable	Yes	Yes	Yes	Yes	Yes	Yes	Yes	Yes
Adjustable Current Limit and Tripout Type	Non Timed	Non Timed	Non Timed	Non Timed	Non Timed	Timed	Timed	Timed
Control of Speed or Torque	Speed	Speed	Speed	Speed Torque	Speed or Torque	Speed or Torque	Speed or Torque	Speed
IR Compensation Adjustment	Yes	Yes	Yes	Yes	Yes	Yes	Yes	Yes
Tachometer Feedback Input	Yes	Yes	Yes	Yes	Yes	Yes	Yes	Yes
Plug-in Horsepower Resistor®	Required	Required	Required	N/A	N/A	N/A	N/A	N/A
UL & cUL Listing, CE	Yes	Yes	Yes	Yes	Yes	Yes	Yes	Yes
AC Line Fuse	Included	Included	Included	External	External	Included	Included	External
DC Armature Fuse	Included with Hp Resistor	Included with Hp Resistor	Included with Hp Resistor	Included with Hp Resistor	External	N/A	N/A	External
Options								
Input Signal Following Mode Capability Current (1-5,4-20,20-50 mA) Voltage (0-25, 0-120, VDC) 0-25, 0-120, VDC)	Opt-BC145 Opt-BC145 No	Opt-BC145 Opt-BC145 No	Opt-BC145 Opt-BC145 No	Opt-BC145 Std 0-10 VDC No	No No Opt BC215 with BC214	No Std 0-±10 VDC Opt-BC212	No Std 0-±10 VDC Opt-BC212	No Std 0-±10VDC Opt-BC212
Electrical Connection To Control Push-On Quick Connects Barrier Terminal Block	Standard Opt-BC147	Standard Opt-BC147	Standard Opt-BC147	No Standard	Standard N/A	No Standard	No Standard	No Standard
Current Sensing Relay/ Overload Protector	Opt-BC146	Opt-BC146	Opt-BC146	Opt-BC146	N/A	Standard	Standard	Standard
Regenerative Accel / Decel Board	No	No	No	No	No	Opt	Opt	Opt
AC Line Filter for CE	Opt-BC24-LF	Opt-BC24-LF	Opt-BC24-LF	Opt-BC24-LF	Opt-BC24-LF	Opt-BC24-LF	Opt-BC24-LF	Opt-BC24-LF

DC Control Dimension Diagrams

BC110/115

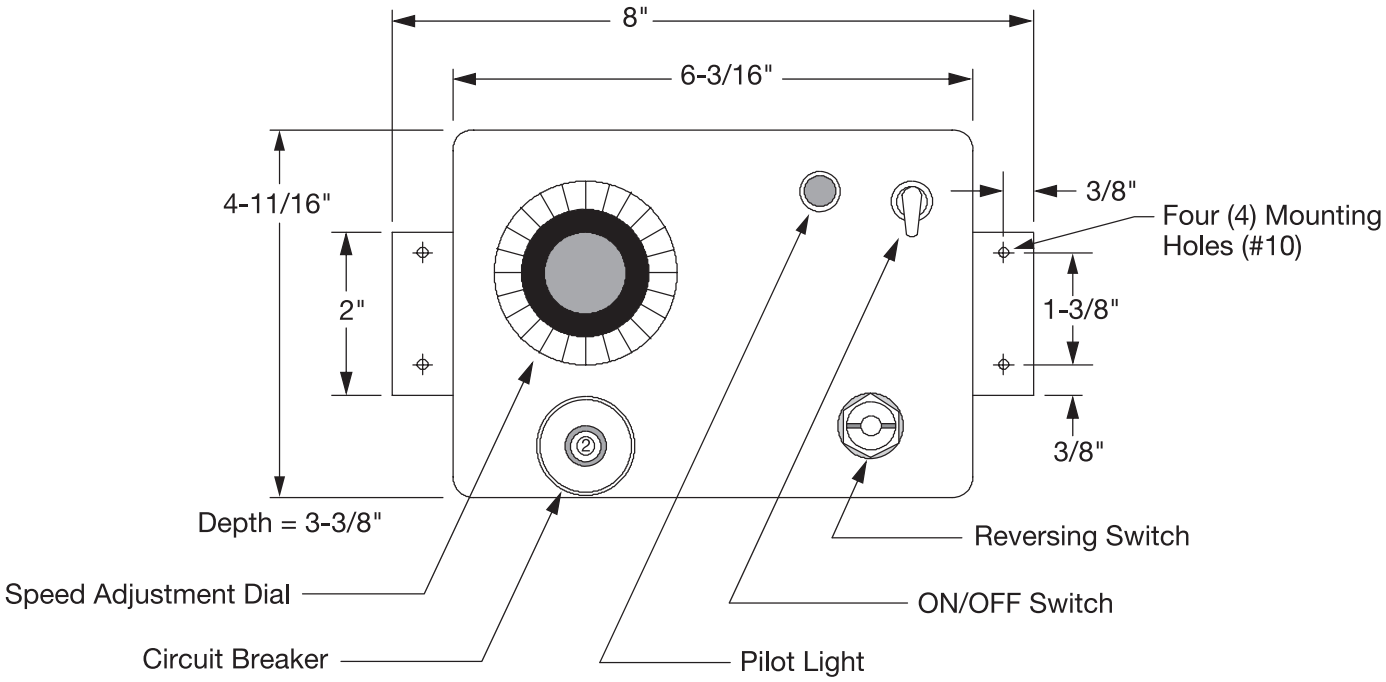

BC130

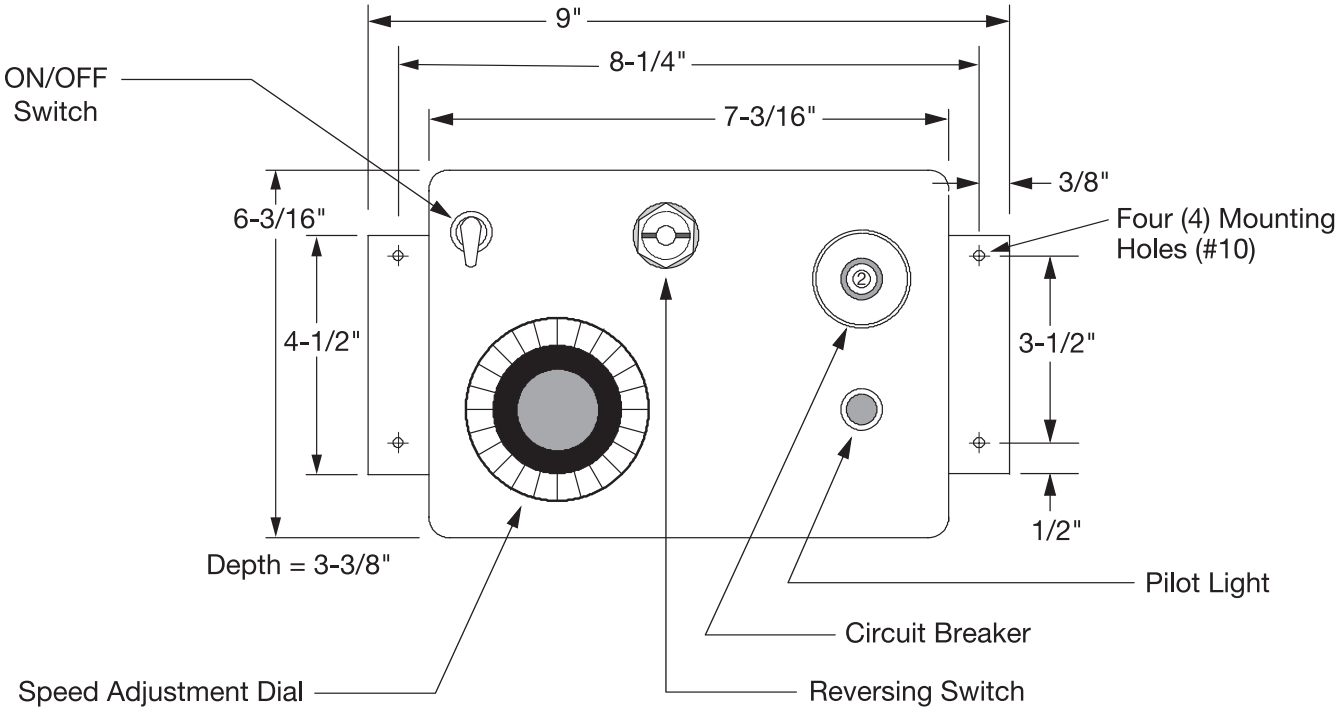

BALDOR

DC Control Dimension Diagrams

BC138, BC139

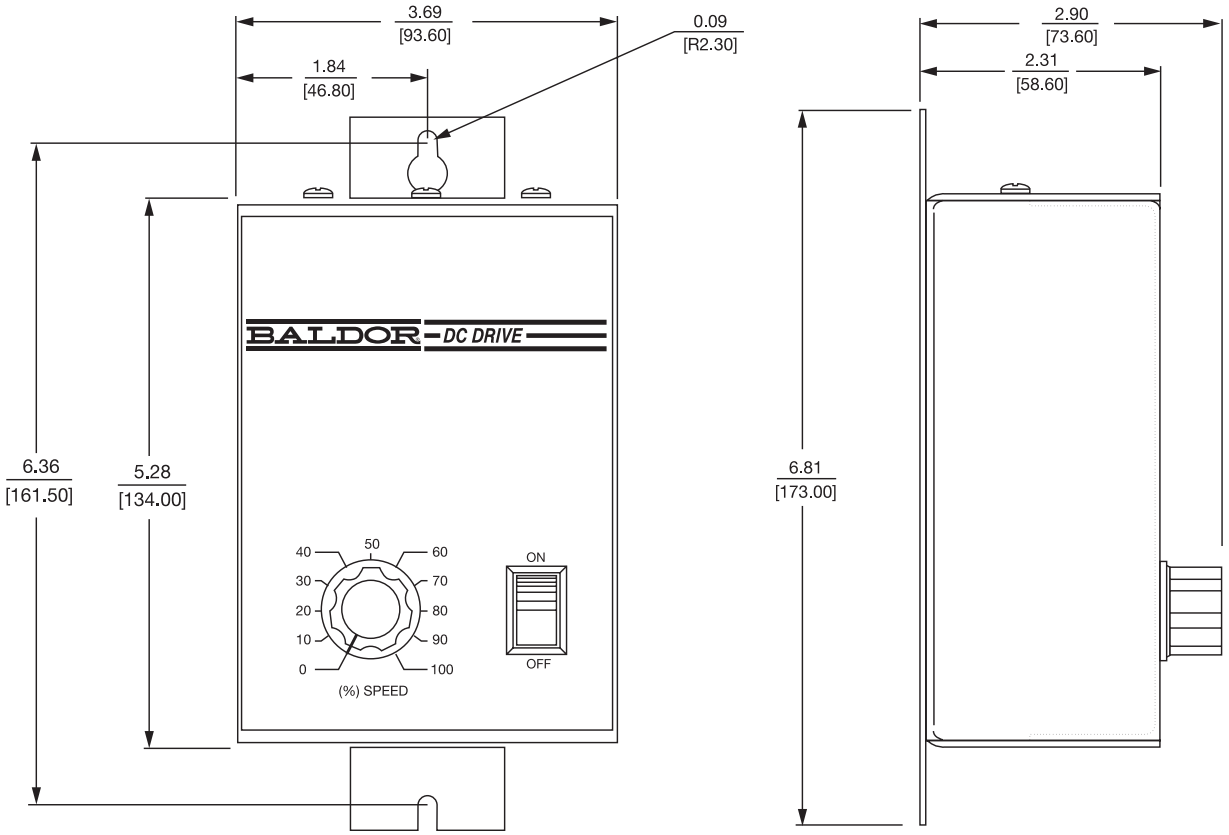

BC140, BC140-FBR

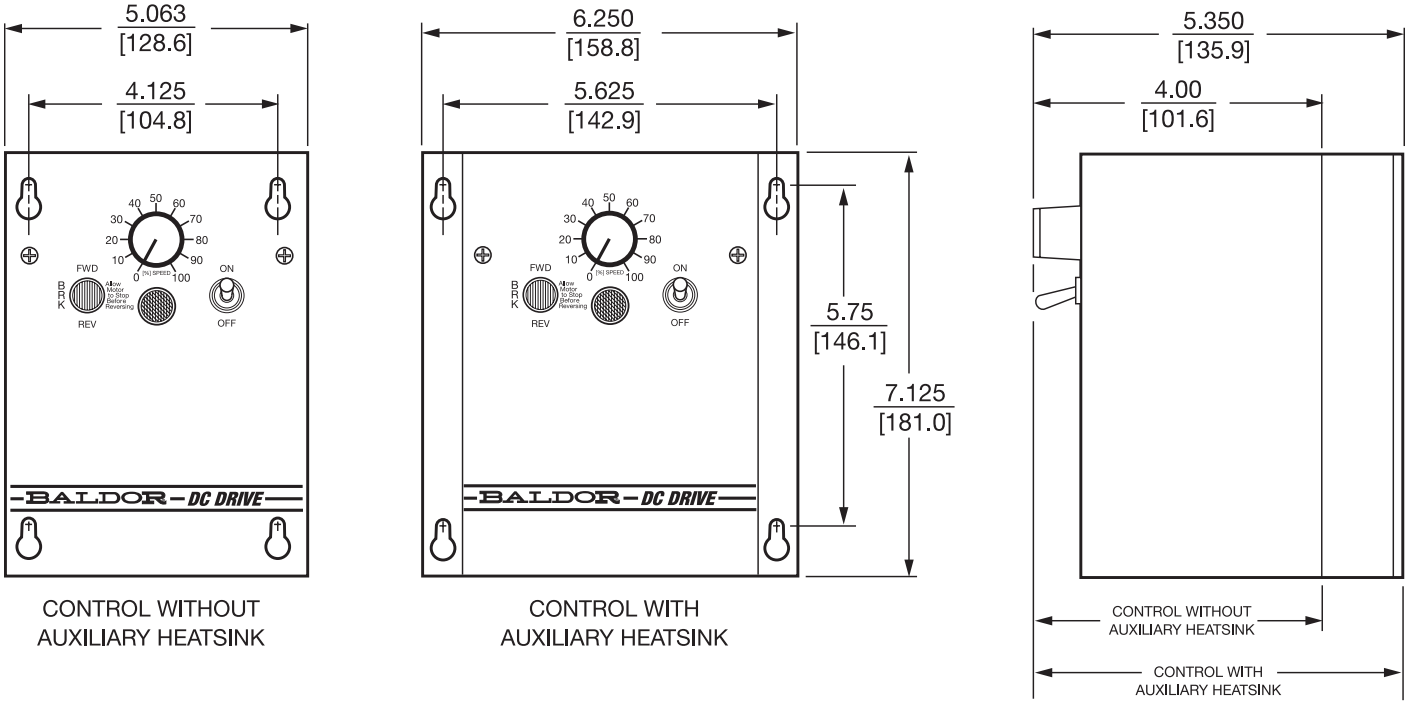

DC Control Dimension Diagrams

BC141, BC142, BC142-6

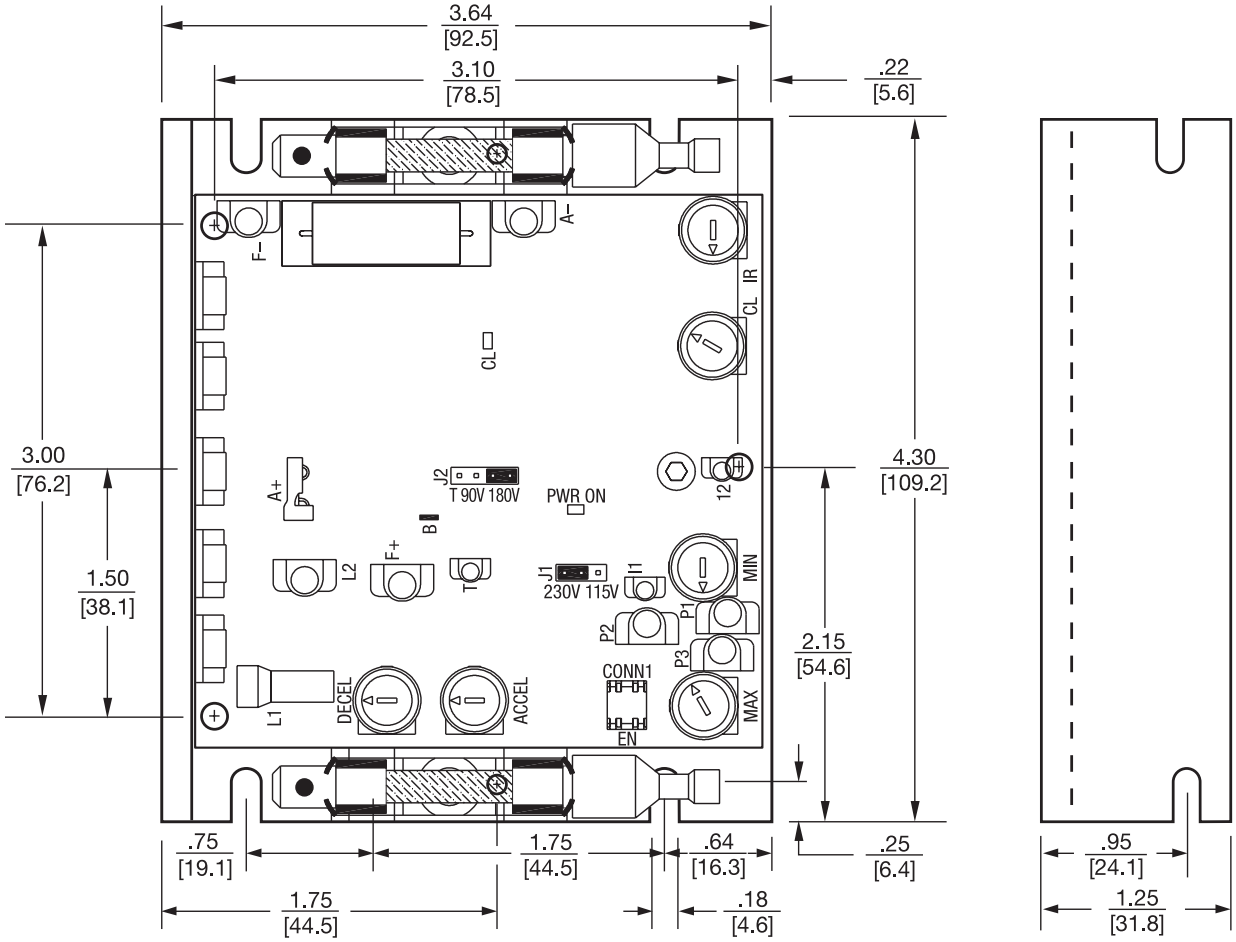

BALDOR

DC Control Dimension Diagrams

BC155

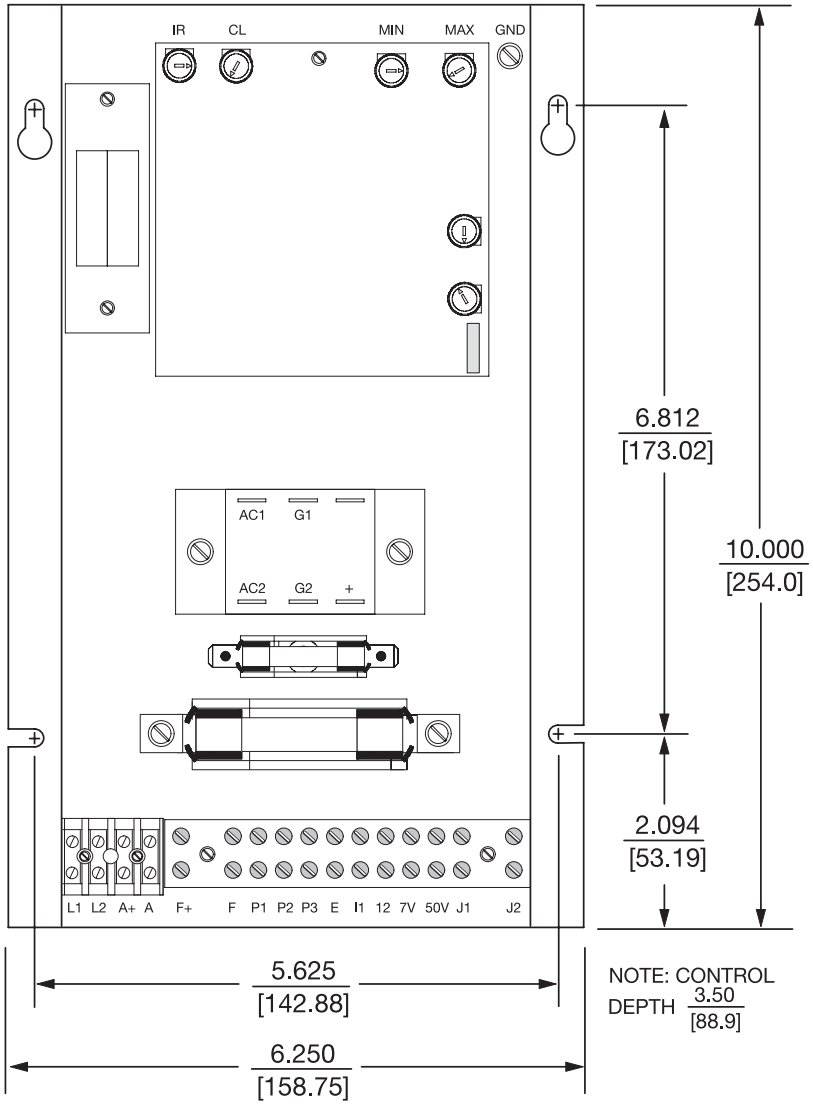

DC Control Dimension Diagrams

BC154, BCWD140, BC160 and BC254

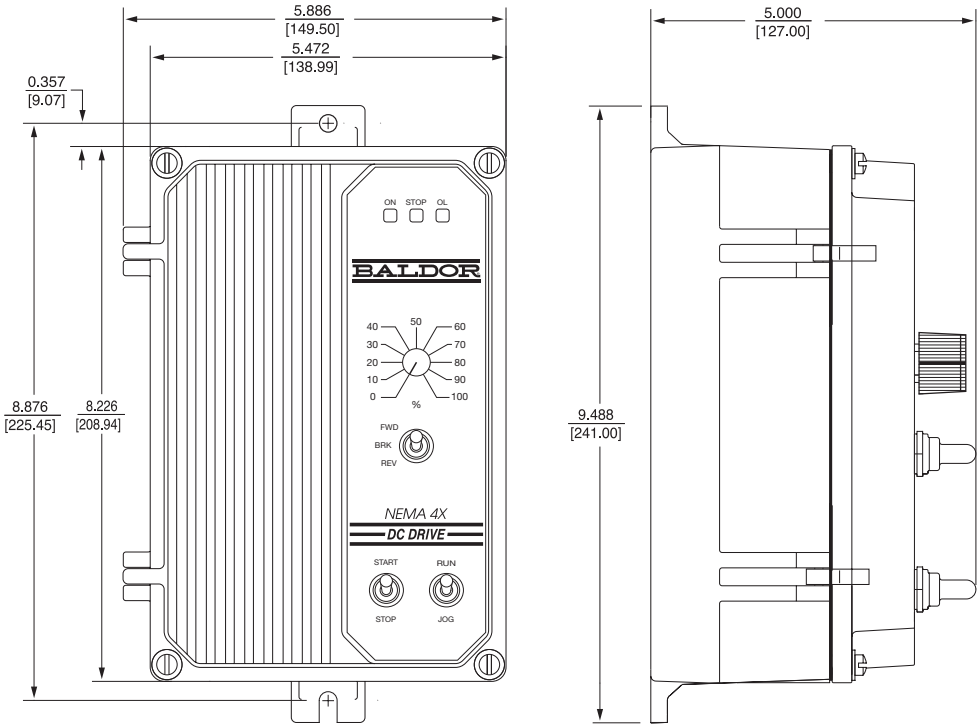

BC200, BC201

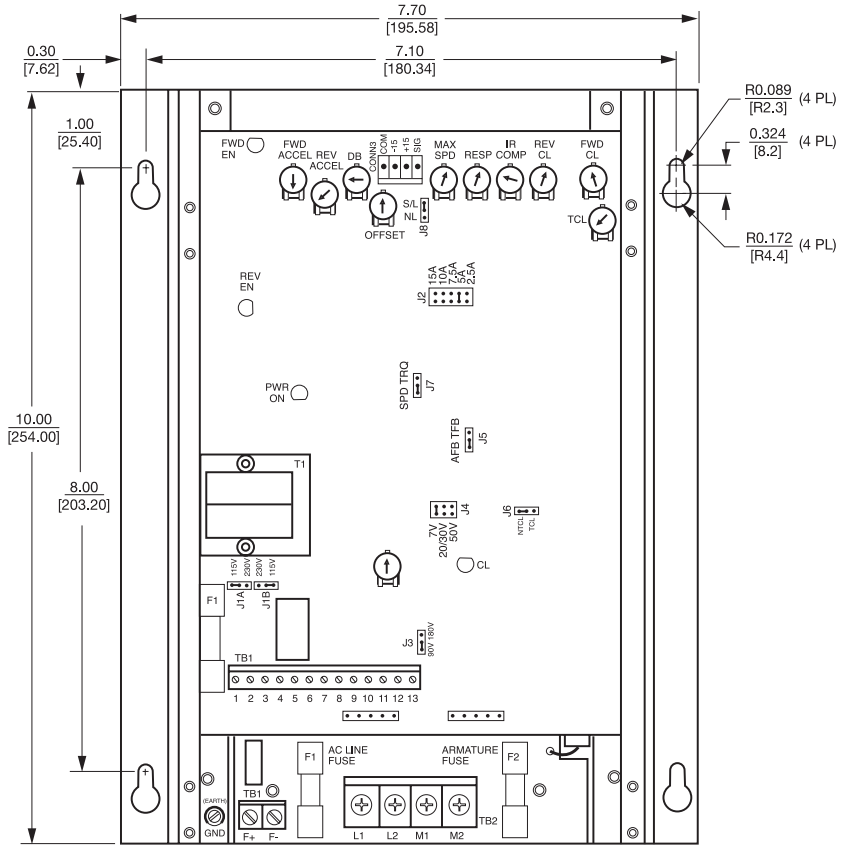

DC Control Dimension Diagrams

BC203

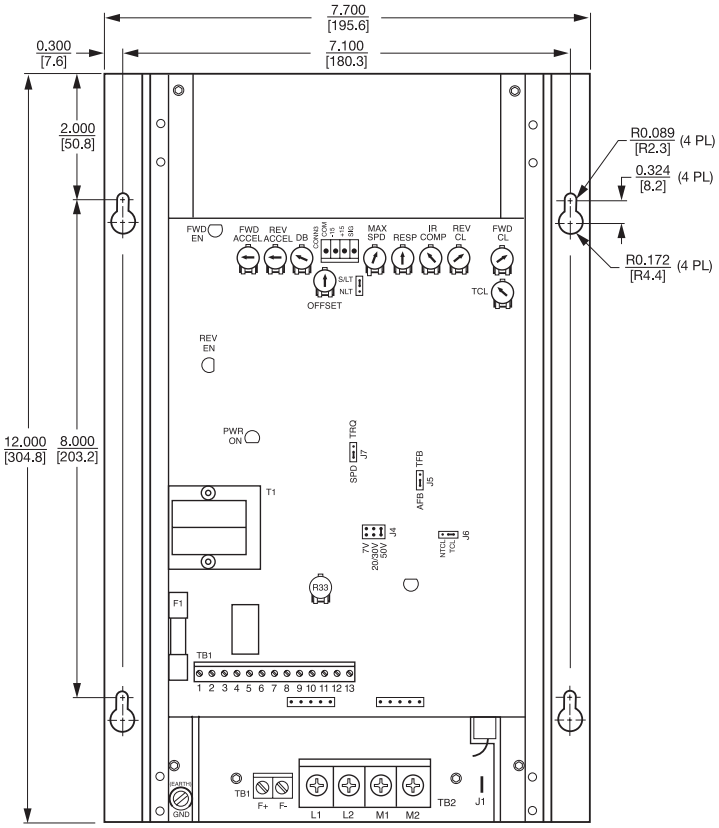

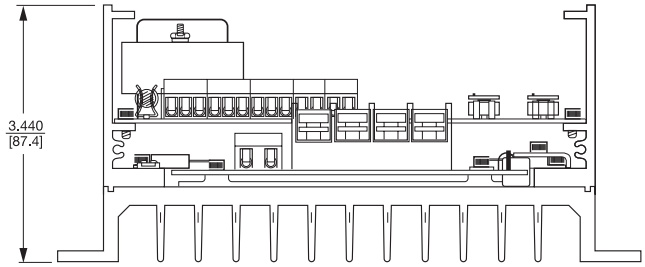

DC Control Dimension Diagrams

BC204

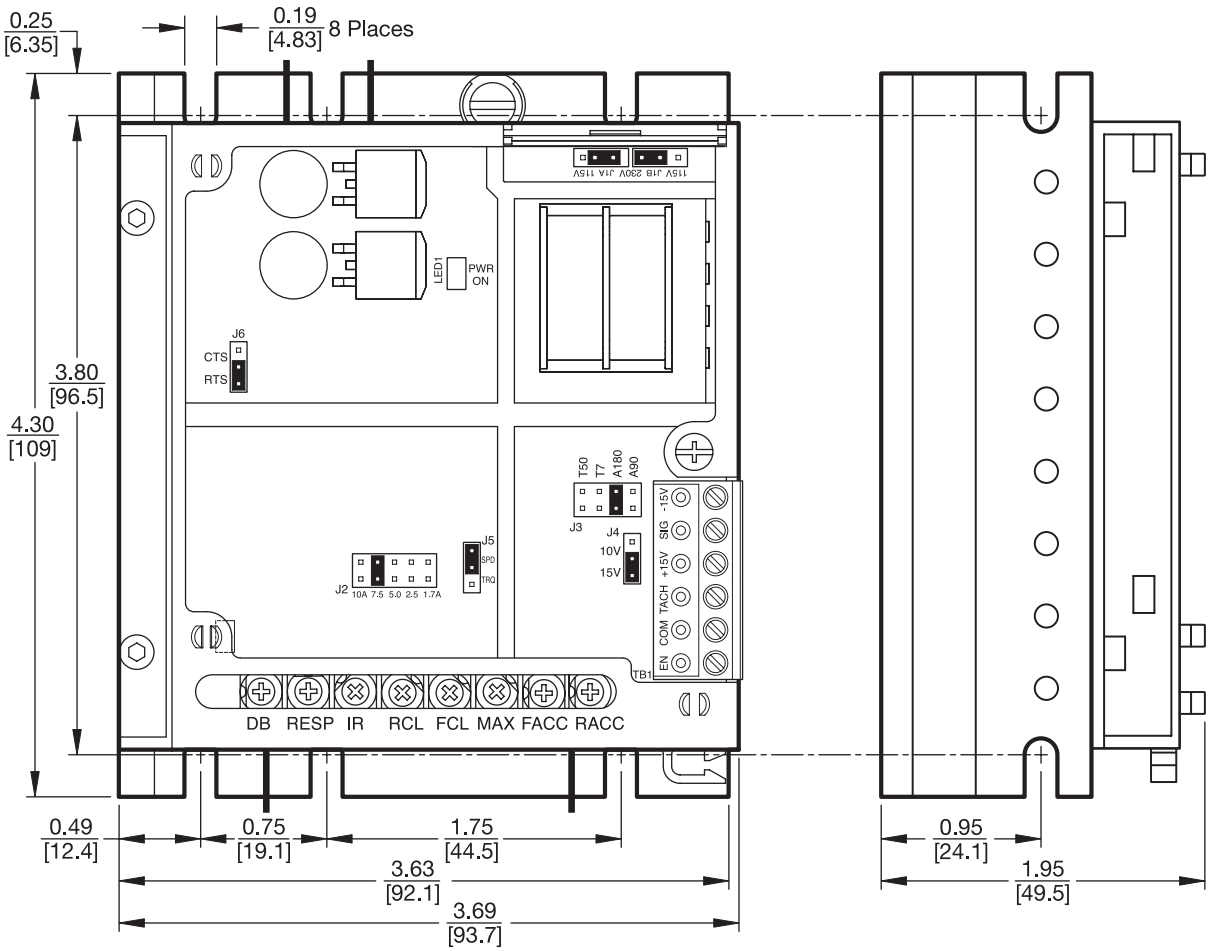

BALDOR

Series 19H Digital DC Control

5 thru 75Hp — **180-264 VAC - 50/60 Hz**
5 thru 300 Hp — **340-528 VAC - 50/60 Hz**

Applications: Constant torque applications. New installations, replacements and original equipment manufacturers (OEM).

Features: Chassis mounting, built-in armature or encoder feedback, high peak currents.

Design Specifications

- Three phase, full wave SCR armature control
- High peak overload, 250-300% (depending on rating)
- Selectable operating modes: Keypad; Standard Run,15 Speed, Bipolar speed/ torque; Serial; Process follower mode.
- Analog meter outputs
- Buffered encoder output
- 9 isolated inputs
- Chassis mounting

Operator Keypad

- Digital Speed Control
- Forward/Reverse Command
- Motor RUN and JOG
- Local/Remote Key
- Stop Command (coast or external DB to stop)
- 32 Character alpha-numeric display
- Remote mount to 100 feet from control
- NEMA 4X enclosure on keypad

Environmental and Operating Conditions

- Input Frequency – 50 or 60 Hz ± 5%
- Service factor – 1.0
- Duty – continuous
- Humidity – 90% max RH non-condensing
- Altitude – 3300 feet max without derate

Protective Features

- Control Input over and under voltage
- Encoder, tach or resolver loss
- Torque proving
- Selectable manual or automatic restart at power loss
- Digital display for fault conditions

Motor Feedback

- 1024 PPR standard (with quadrature)
- Power output: +5VDC, 300 mA max
- Max frequency: 1 MHz
- Optional feedback: tachometer or resolver through expansion board

Output Ratings	Voltage	DC - 0-1.3 times VAC input
Input Ratings	Frequency	50 or 60 Hz ± 5%
	Voltage	200-240 VAC ± 10%; 380-480 VAC ± 10%
	Phase	Three phase
Control Spec.	Impedance	5% maximum
	Control Method	Full wave-uni-directional DC control, NEMA type C
	Speed Setting	0-5VDC, 0-10VDC, 4-20 mA, digital via keypad, optional RS232/422/485
	Accel/Decel	0-3600 seconds (decel-coast or controlled by external DB resistors) - no S-curve decel
	Minimum Speed	0-maximum speed
	Maximum Speed	0-5000 RPM
	Motor Matching	Automatic tuning to motor with manual override
Field Power Supply	Type	Voltage limited, current regulated full wave single phase
	Voltage	0 to 10-85% of AC line Input in DC volts
	Current	0.1-15 Amps maximum-standard, 0.1-40 amps maximum-optional
	Field Economy Level	OFF, 25-100%
	Field Forcing Level	100-125% (hoist modes only)
Motor Feedback	Feedback Type	Armature or incremental encoder coupled to motor shaft
	Pulses/Rev	60-65535 selectable, 1024 standard
	Voltage Output	2 channel in quadrature, 5VDC differential
	Marker Pulse	Required for position orientation
	Power Input	5VDC, 300 mA maximum
	Maximum Frequency	1 MHz
	Optional Feedback	Tachometer or resolver via expansion board
Protective Functions	Control Trip	Missing control power, over current armature over voltage, motor overspeed over temperature (motor & control), field loss, encoder tach or resolver loss, phase loss, motor overload and overcurrent
	Fusing	Standard input line, armature and field power supply fuses
	External Output	LED indicator for trip conditions, 4 assignable logic outputs - 30VDC Max, 2 assignable analog outputs 0-5VDC
LCD Display	Running	Motor RPM, output current, voltage (selectable)
	Setting	Parameter values for setup and review
	Trip	Separate message for each trip, last 31 trips retained in memory
Ambient Conditions	Temperature	0-40°C for UL listing
	Cooling	Forced air included when required

NOTE: Use of DC tach for feedback requires DC Tachometer Interface Board, catalog number EXB006A01. Other expansion boards are available.

Series 19H Digital DC Controls

Hp	Input Volt	Armature Output Current		Catalog Number	List Price	Mult. Sym.	Chassis Size
		Amps Cont	Amps Peak				
230 Volt Input - 240 VDC Output							
5	230	20	40	**BC19H205-CO**	5,005	E1	A
10	230	40	80	**BC19H210-CO**	5,005	E1	A
15	230	60	120	**BC19H215-CO**	5,378	E1	A
20	230	75	150	**BC19H220-CO**	5,814	E1	B
25	230	100	200	**BC19H225-CO**	6,124	E1	B
40	230	140	280	**BC19H240-CO**	7,853	E1	C
50	230	180	360	**BC19H250-CO**	8,444	E1	C
60	230	210	420	**BC19H260-CO**	9,330	E1	C
75	230	270	540	**BC19H275-CO**	10,117	E1	C
460 Volt Input - 500 VDC Output							
10	460	20	40	**BC19H410-CO**	5,097	E1	A
20	460	40	80	**BC19H420-CO**	5,097	E1	A
30	460	60	120	**BC19H430-CO**	5,503	E1	A
40	460	75	150	**BC19H440-CO**	5,950	E1	B
50	460	100	200	**BC19H450-CO**	6,262	E1	B
75	460	140	280	**BC19H475-CO**	8,257	E1	C
100	460	180	360	**BC19H4100-CO**	8,818	E1	C
125	460	210	419	**BC19H4125-CO**	9,701	E1	C
150	460	270	540	**BC19H4150-CO**	10,502	E1	C
200	460	350	875	**BC19H4200-CO**	12,876	E1	D
300	460	500	1000	**BC19H4300-CO**	17,256	E1	D

OPTIONS: See pages 104-105 for optional Expansion Boards including Tachometer Feedback, RS-232, RS-422, RS-485, Resolver, Interface, etc. 40 Amp field power supply.
FPS40BC1920

Dimensions in/(mm)

Size	Hp	Outside			Mounting		Approx. Shpg. Wgt.
		Height	Width	Depth	Height	Width	
A	ALL	20.60 (523.2)	11.00 (279.4)	9.87 (250.7)	18.00 (457.2)	10.25 (260.4)	39
B 230V	ALL	25.70 (652.8)	11.00 (279.4)	9.84 (249.9)	23.87 (606.3)	10.25 (260.4)	67
B 460V	ALL	26.75 (679.5)	11.00 (279.4)	9.84 (249.9)	24.94 (633.5)	10.25 (260.4)	69
C 230V	40-60	26.50 (673.1)	11.75 (298.5)	10.63 (270.0)	23.90 (607.0)	10.25 (260.4)	80
C 460V	75-100	27.25 (692.2)	11.75 (298.5)	10.63 (270.0)	24.65 (626.1)	10.25 (260.4)	84
C 230V	75	33.00 (838.2)	11.75 (298.5)	10.63 (270.0)	23.90 (607.6)	10.25 (260.4)	94
C 460V	125-200	33.75 (857.3)	11.75 (298.5)	10.63 (270.0)	24.65 (626.1)	10.25 (260.4)	97
D	ALL	43.80 (1112.5)	16.87 (428.5)	12.43 (315.7)	39.25 (997.0)	13.75 (349.3)	272

BALDOR

Series 19H Digital DC Control Dimensions

Size A

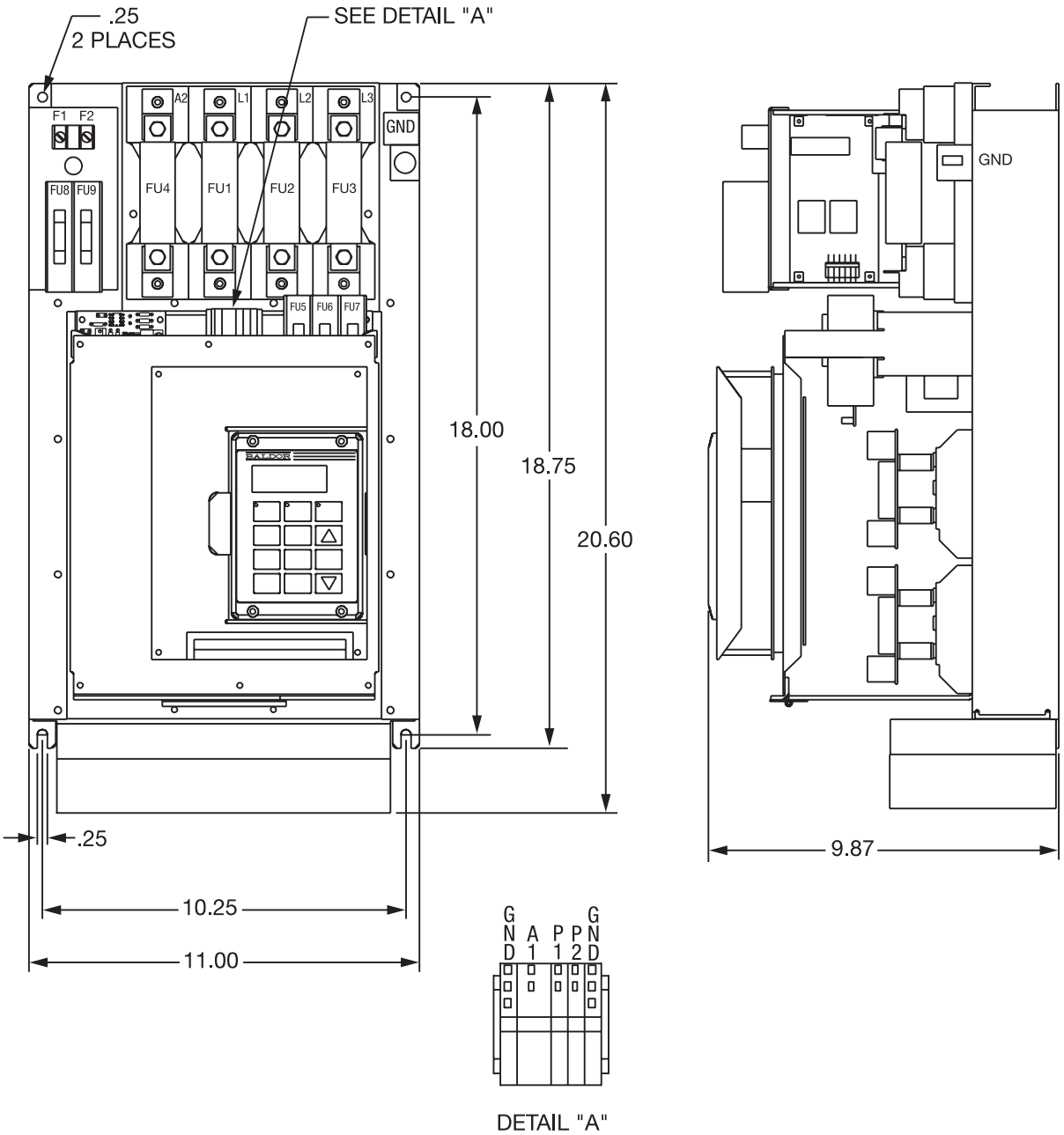

Series 19H Digital DC Control Dimensions

Size B

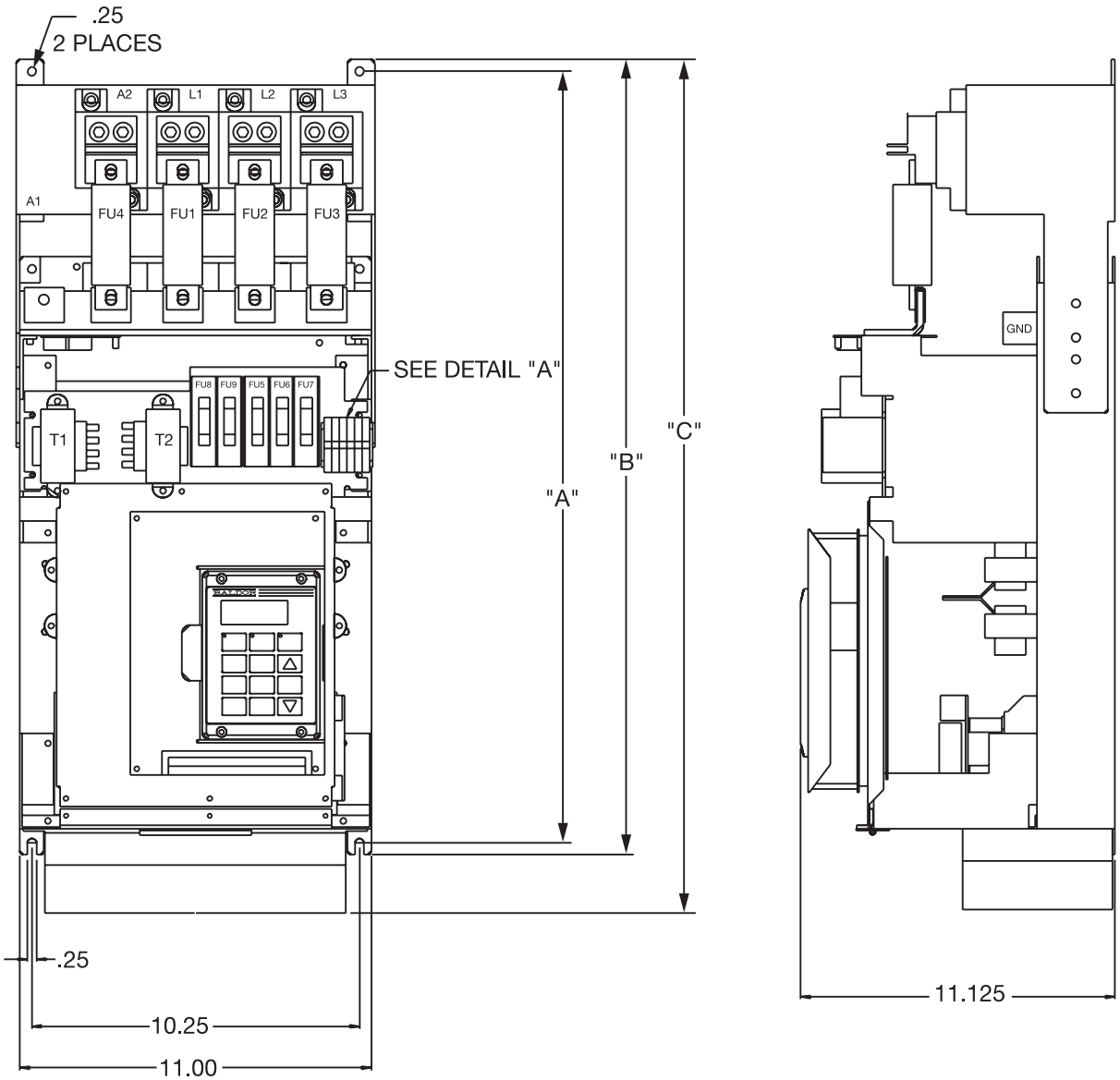

Input Voltage	"A"	"B"	"C"
230V	23.12	23.87	25.70
460V	24.19	24.94	26.75

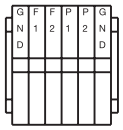

DETAIL "A"

BALDOR

Series 19H Digital DC Control Dimensions

Size C

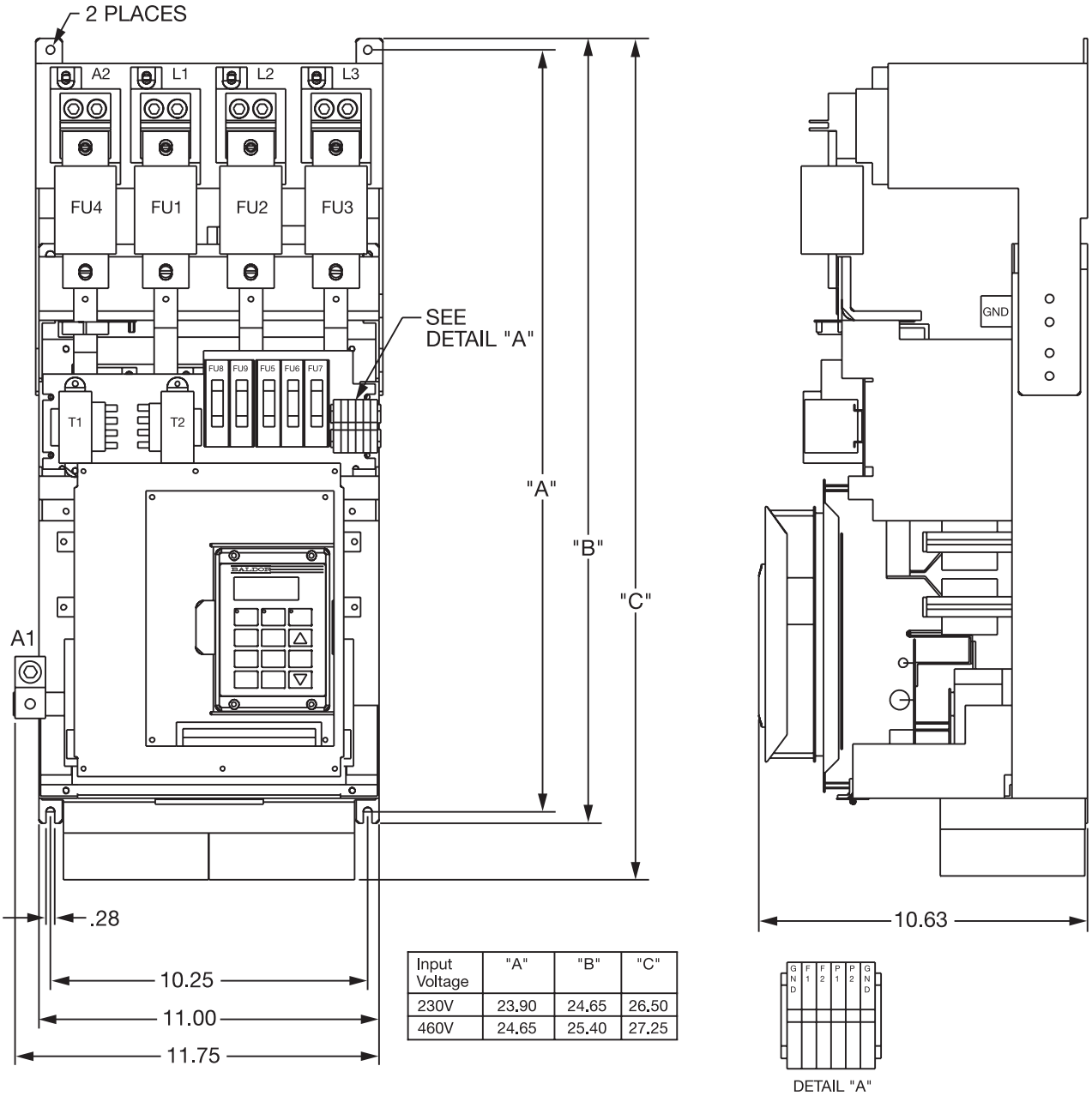

Input Voltage	"A"	"B"	"C"
230V	23.90	24.65	26.50
460V	24.65	25.40	27.25

DETAIL "A"

Series 19H Digital DC Control Dimensions

Size D

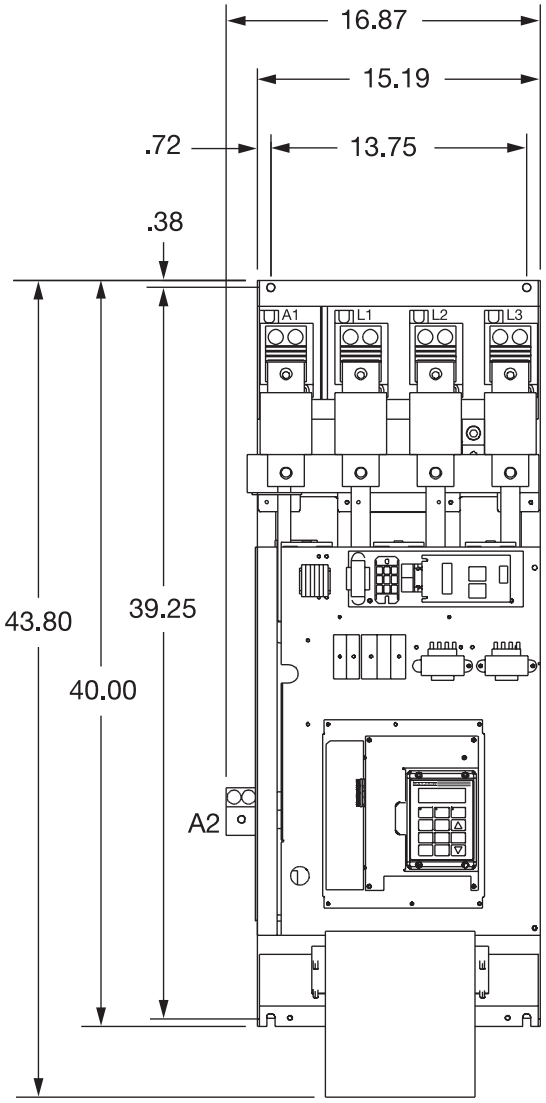

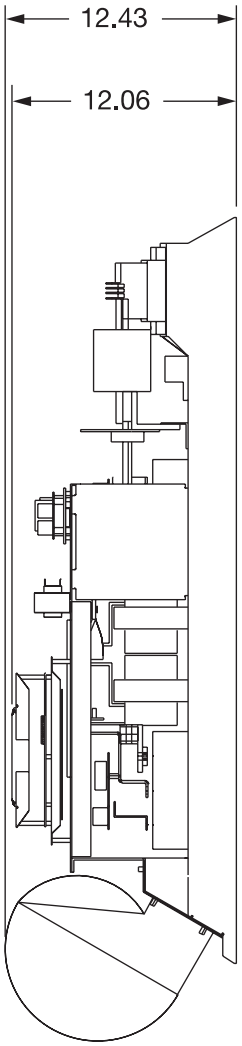

BALDOR

Series 20H Line Regenerative Digital DC Controls

5 thru 75Hp — **180-264 VAC - 50/60 Hz**
5 thru 300 Hp — **340-528 VAC - 50/60 Hz**

Applications: Constant torque applications. New installations, replacements and original equipment manufacturers (OEM).

Features: Chassis mounting, built-in armature or encoder feedback. High peak current.

Design Specifications

- Three phase, full wave, four quadrant SCR armature control.
- Peak overload capacity of 250-300% (depending on rating)
- Selectable operating modes: Keypad, Standard Run, 15 Speed, Bipolar speed/torque, Serial, Bipolar Hoist, 7 Speed Hoist, process follower
- Motor shaft orient to encoder marker or external switch closure (encoder feedback)
- 15 preset speeds (7 in Hoist Mode.)

Operator Keypad

- Digital Speed Control
- Forward/Reverse Command
- Motor RUN and JOG
- Local/Remote Key
- Stop Command
- 32 Character alpha-numeric display
- Remote mount to 100 feet from control
- NEMA 4X enclosure on keypad

Environmental and Operating Conditions

- Input frequency - 50 or 60Hz ±5%
- Service factor - 1.0
- Duty - continuous
- Humidity - 90% max RH non-condensing
- Altitude - 3300 feet max without derate

Protective Features

- Torque proving
- Selectable manual or automatic restart at power loss
- Digital display for fault conditions

Motor Feedback

- Power output: +5VDC, 300 mA max
- Positioning: Buffered encoder pulse train output for position loop control
- Optional feedback: tachometer or resolver through expansion board

Output Ratings	Voltage	DC 0-1.13 times VAC input
Input Ratings	Frequency	50 or 60 Hz ± 5%
	Voltage	200-240 VAC ± 10%; 380-480 VAC ± 10%
	Phase	Three phase
Control Spec.	Impedance	5% maximum
	Control Method	Full wave-bi-directional regenerative DC control, NEMA type C
	Speed Setting	±5VDC, 0-5VDC, ±10VDC, 0-10VDC, 4-20 mA, digital via keypad, optional RS232/422/485
	Accel/Decel	0-3600 seconds or s-curve
	Minimum Speed	0-maximum speed
	Maximum Speed	0-5000 RPM
	Motor Matching	Automatic tuning to motor with manual override
Field Power Supply	Type	Voltage limited, current regulated full wave single phase
	Voltage	0 to 10-85% of AC line Input in DC volts
	Current	0.1-15 Amps maximum-standard, 0.1-40 amps maximum-optional
	Field Economy Level	OFF, 25-100%
	Field Forcing Level	100-125% (hoist modes only)
Motor Feedback	Feedback Type	Armature or incremental encoder coupled to motor shaft
	Pulses/Rev	60-65535 selectable, 1024 standard
	Voltage Output	2 channel in quadrature, 5VDC differential
	Marker Pulse	Required for position orientation
	Power Input	5VDC, 300 mA maximum
	Maximum Frequency	1 MHz
	Positioning	Optional buffered encoder pulse train output for position loop controller
	Optional Feedback	Tachometer or resolver via expansion board
Protective Functions	Control Trip	Missing control power, over current armature over voltage, motor overspeed over temperature (motor & control), field loss, encoder tach or resolver loss, phase loss, motor overload and overcurrent
	Fusing	Standard input line, armature and field power supply fuses
	External Output	LED indicator for trip conditions, 4 assignable logic outputs - 30VDC Max, 2 assignable analog outputs 0-5VDC
LCD Display	Running	Motor RPM, output current, voltage (selectable)
	Setting	Parameter values for setup and review
	Trip	Separate message for each trip, last 31 trips retained in memory
Ambient Conditions	Temperature	0-40°C for UL listing
	Cooling	Forced air included when required

NOTE: Use of DC tach for feedback requires DC Tachometer Interface Board, catalog number EXB006A01.

Series 20H Line Regenerative Digital DC Controls

Hp	Input Volt	Armature Output Current		Catalog Number	List Price	Mult. Sym.	Chassis Size
		Amps Cont	Amps Peak				
230 Volt Input - 240 VDC Output							
5	230	20	60	**BC20H205-CL**	5,832	E1	A
10	230	40	120	**BC20H210-CL**	5,832	E1	A
15	230	60	150	**BC20H215-CL**	5,832	E1	A
20	230	75	190	**BC20H220-CL**	6,112	E1	B
25	230	100	250	**BC20H225-CL**	6,883	E1	B
40	230	140	420	**BC20H240-CL**	8,928	E1	C
50	230	180	480	**BC20H250-CL**	9,660	E1	C
60	230	210	540	**BC20H260-CL**	10,215	E1	C
75	230	270	680	**BC20H275-CL**	12,531	E1	C
460 Volt Input - 500 VDC Output							
5, 7.5, 10	460	20	60	**BC20H410-CL**	6,137	E1	A
15, 20	460	40	120	**BC20H420-CL**	6,137	E1	A
25, 30	460	60	150	**BC20H430-CL**	6,335	E1	A
40	460	75	190	**BC20H440-CL**	6,615	E1	B
50	460	100	250	**BC20H450-CL**	7,336	E1	B
60, 75	460	140	420	**BC20H475-CL**	10,150	E1	C
100	460	180	480	**BC20H4100-CL**	10,953	E1	C
125	460	210	530	**BC20H4125-CL**	12,214	E1	C
150	460	270	680	**BC20H4150-CL**	13,359	E1	C
200	460	350	875	**BC20H4200-CL**	16,061	E1	D
250	460	420	1050	**BC20H4250-CL**	20,114	E1	D
300	460	510	1250	**BC20H4300-CL**	22,034	E1	D

OPTIONS: See pages 104-105 for optional Expansion Boards including Tachometer Feedback, RS-232, RS-422, RS-485, Resolver, Interface, etc.
40 Amp field power supply. FPS40BC1920

Dimensions in/(mm)

Size	Hp	Outside Height	Width	Depth	Mounting Height	Mounting Width	Approx. Shpg. Wgt.
A	ALL	20.60 (523.2)	11.00 (279.4)	9.87 (250.7)	18.00 (457.2)	10.25 (260.4)	39
B 230V	ALL	25.70 (652.8)	11.00 (279.4)	9.84 (249.9)	23.87 (606.3)	10.25 (260.4)	67
B 460V	ALL	26.75 (679.5)	11.00 (279.4)	9.84 (249.9)	24.94 (633.5)	10.25 (260.4)	69
C 230V	40-60	26.50 (673.1)	11.75 (298.5)	10.63 (270.0)	23.90 (607.0)	10.25 (260.4)	80
C 460V	75-100	27.25 (692.2)	11.75 (298.5)	10.63 (270.0)	24.65 (626.1)	10.25 (260.4)	84
C 230V	75	33.00 (838.2)	11.75 (298.5)	10.63 (270.0)	23.90 (607.6)	10.25 (260.4)	94
C 460V	125-200	33.75 (857.3)	11.75 (298.5)	10.63 (270.0)	24.65 (626.1)	10.25 (260.4)	97
D	ALL	43.80 (1112.5)	16.87 (428.5)	12.43 (315.7)	39.25 (997.0)	13.75 (349.3)	272

Series 20H Line Regenerative Digital DC Control Dimensions

Size A

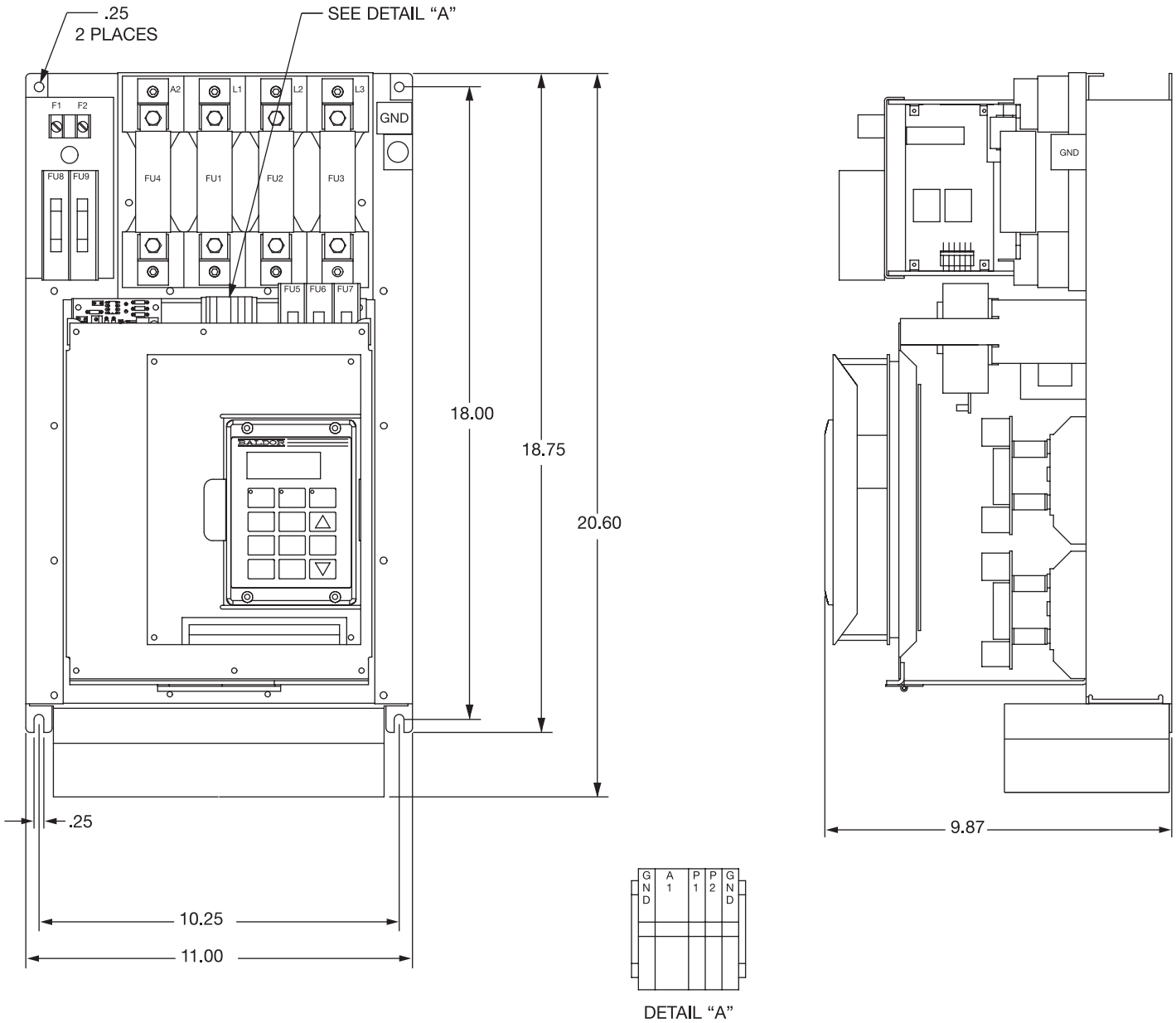

Series 20H Line Regenerative Digital DC Control Dimensions

Size B

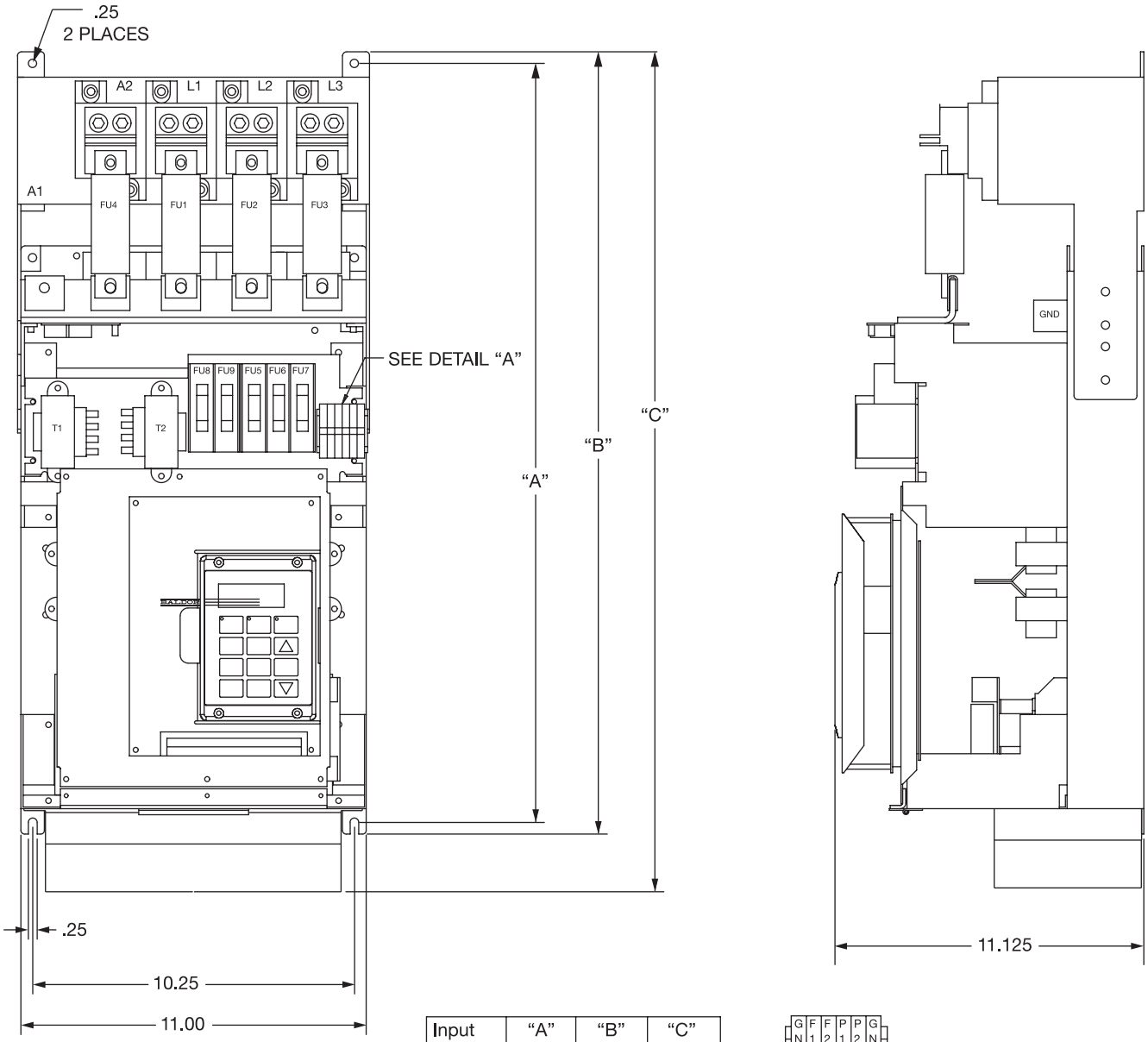

Input Voltage	"A"	"B"	"C"
230V	23.12	23.87	25.70
460V	24.19	24.94	26.75

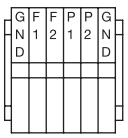

DETAIL "A"

BALDOR

Series 20H Line Regenerative Digital DC Control Dimensions

Size C

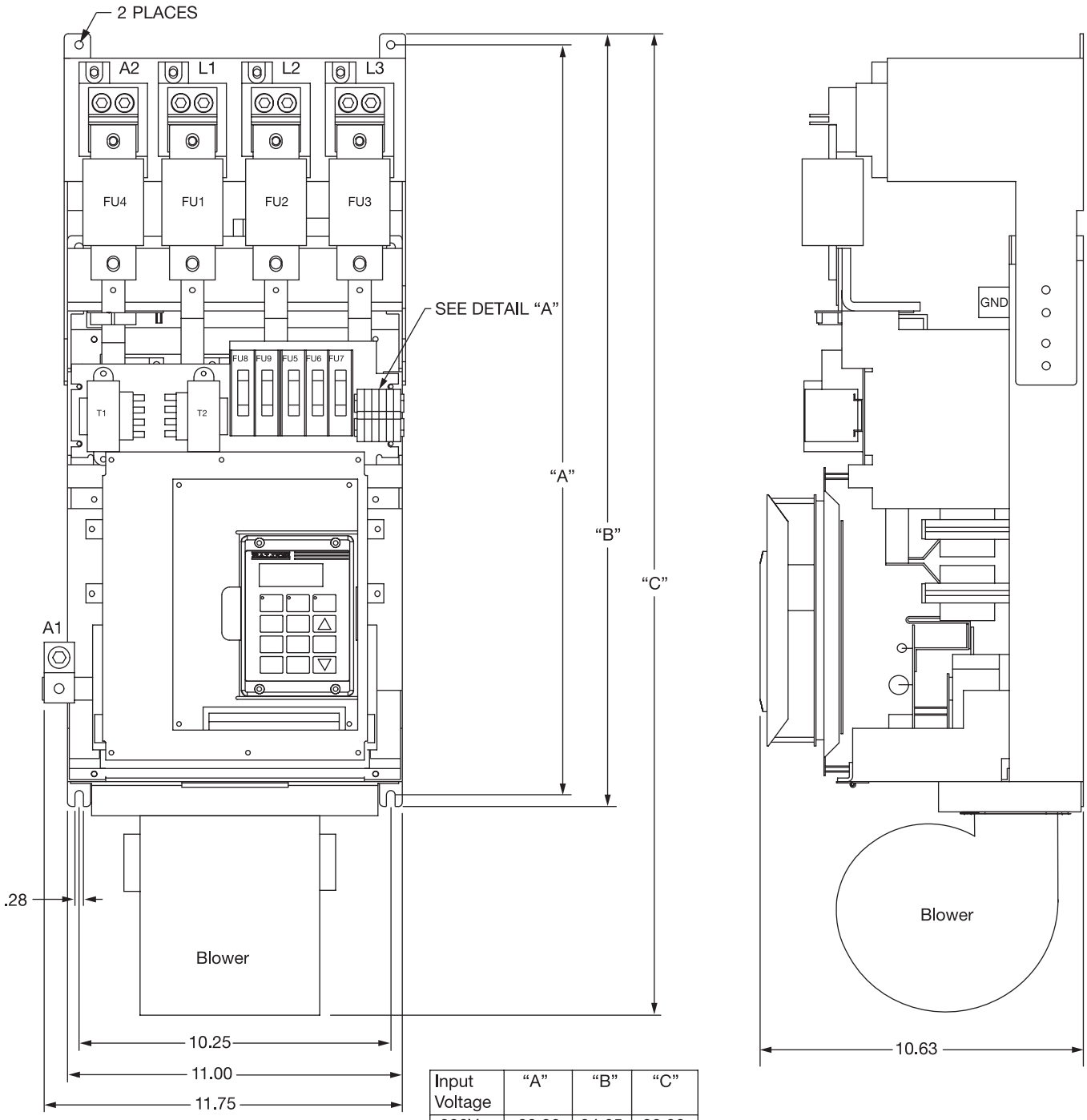

Input Voltage	"A"	"B"	"C"
230V	23.90	24.65	32.90
460V	24.65	25.40	33.65

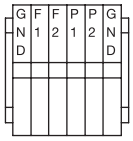

DETAIL "A"

Series 20H Line Regenerative Digital DC Control Dimensions

Size D

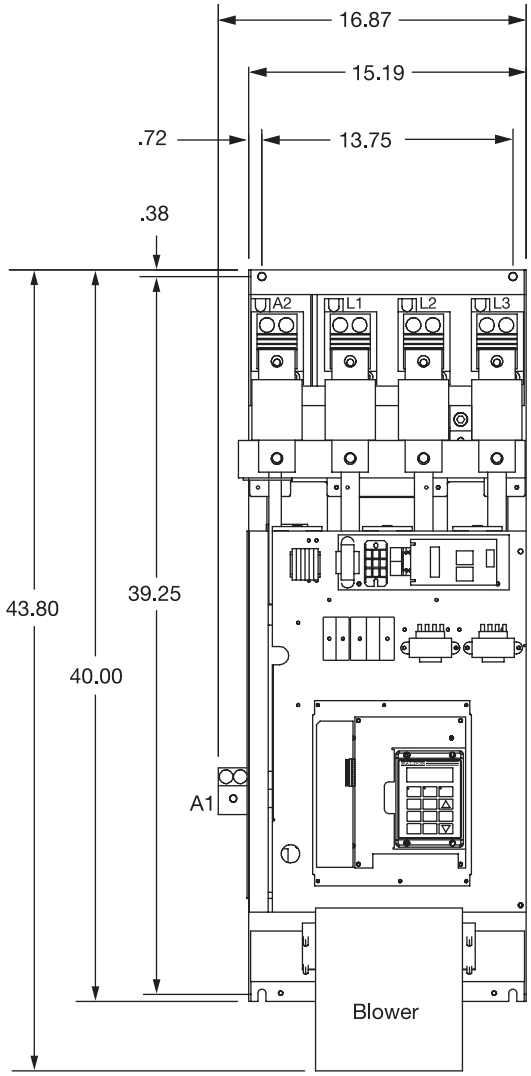

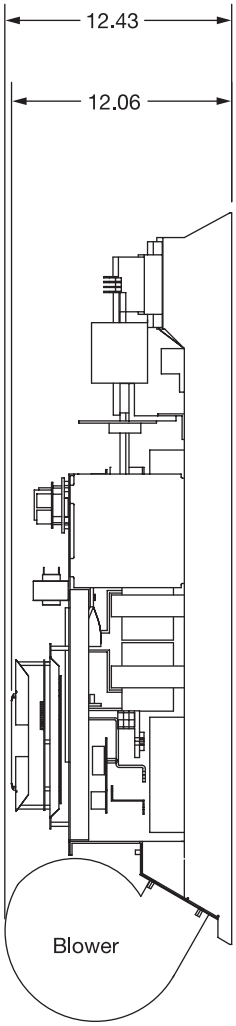

Series 20H Line Regenerative Digital DC Control Dimensions

Size G

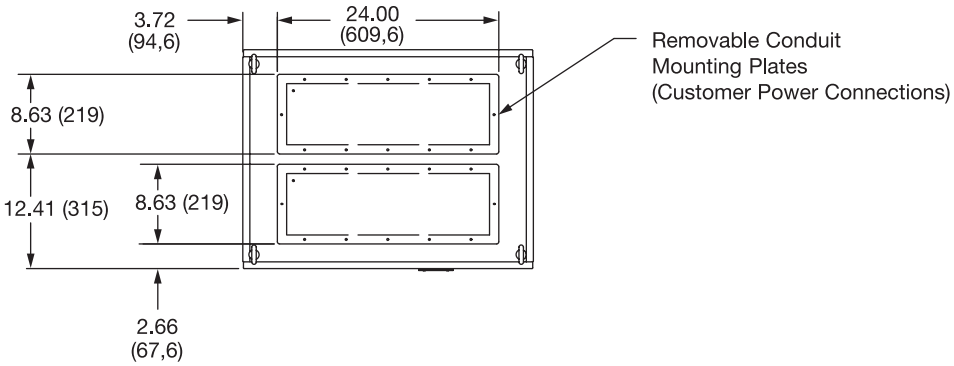

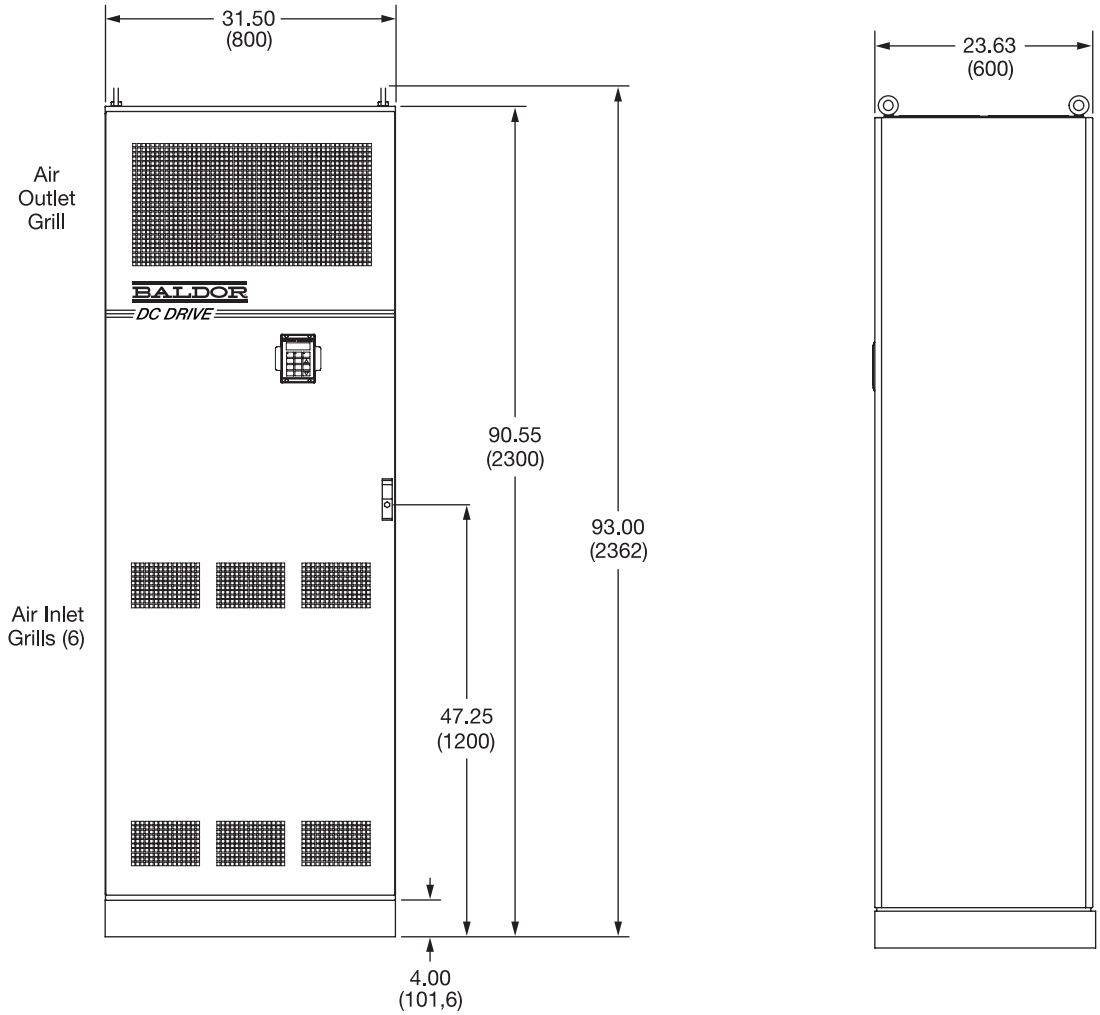

Application Information – VS1 Drives

Baldor Drive Products support diverse applications with a wide variety of products. AC Drives serve processing needs and industrial applications such as fans, pumps, mixers, conveyors, and extruders, plus many more applications. Any drive featured in this publication will provide some form of motor speed regulation and variable speed operation. Within these categories, we offer a broad spectrum of horsepower ranges, drive interconnectivity capabilities, and flexibilities.

Variable Speed Drives provide the following benefits:

- Wide constant horsepower speed range
- Proven performance with matched drive/motor packages
- High speed regulation capabilities
- Worldwide Sales and Technical support

Which drive is right for you?

Your choice depends on many application-specific factors such as ambient conditions, type of loads, duty cycle, maintenance accessibility, horsepower range, sequencing and more. If you have specific questions, or require application/selection assistance, please contact your nearest Baldor Sales Office.

AC Drive Characteristics

- AC drives utilize a solid-state adjustable frequency inverter which adjusts frequency and voltage for varying the speed of an otherwise, conventional fixed speed AC motor. This is achieved through Pulse-Width Modulation (PWM) of the voltage output to the motors.
- Available from 1/4 to 1000 HP
- Voltage and frequency are maintained at a constant relationship at any motor speed to maintain a constant torque. This is known as the volts per hertz ratio.

Standard AC Drives are often the best choice when:

- The environment surrounding the AC motor is corrosive, potentially explosive, or very wet, and demands special enclosures such as explosion-proof, washdown, XT-Extra Tough, etc.
- Motors are likely to receive little regular maintenance due to inaccessibility of the motor or poor maintenance practices.
- The motor must be small in size and weigh as little as possible.
- Motor speeds can reach 10,000 RPM.
- Multiple motors are operated at the same speed by a single drive.
- Existing fixed speed (Design B) AC motors can possibly be used.
- A UL listed AC drive and motor package for a hazardous classified locations is required.
- C-E compliance is required at 2 HP or less.

Additionally, Vector AC Drives are often the best choice for:

- Applications requiring full load torque at zero speed.
- Fast changing loads.
- Tight speed regulation.
- Coordinated speed control for multiple drive axes.
- Applications requiring increased starting torque.
- Precise closed loop speed regulation (to 0.01% and less) is required.
- High dynamic response.
- Web processes, material handling sorter conveyors, metering pumps, extruders, and test stands.

BALDOR

Application Information – VS1 Drives

AC Motor Selection

Various types of AC induction motors are suitable for operation with AC drives. It is essential that the user understand the nature of the application in terms of load characteristics, speed range, and drive requirements, as they relate to the AC drive system, so that the proper combination of motor and drive can be selected for optimum performance.

The following motor performance graphs represent the maximum continuous capability of the respective motors when operated with AC drives. These guidelines are conservative and are based upon full rated conditions (i.e., full horsepower requirements operating continually in a 40º C ambient. Full rated input voltage is assumed.) Since motors are frequently sized larger by the user than the actual horsepower required to provide a performance safety margin, the actual motor performance may be less than 100% full load capability. This should be considered in using the data on the graphs.

Most standard AC motors are designed to operate at a fixed, rated frequency and speed. At this fixed speed, the built-in cooling system will keep the motor from overheating. When operated as an adjustable speed device at slower speeds, the motor cooling action will be reduced. On such applications, the motor may need to be a motor specifically designed for AC drive operation such as the RPM AC Motor. RPM AC Motors offer premium performance on Baldor VS AC Drives.

Sizing the AC Motor

The following procedure gives a conservative, engineering-based approach for sizing and selecting various AC motors for use with the AC drive.

WARNING
MACHINERY BUILDERS AND/ OR USERS ARE RESPONSIBLE FOR INSURING THAT ALL DRIVE TRAIN MECHANISMS, THE DRIVEN MACHINE, AND PROCESS MATERIAL ARE CAPABLE OF SAFE OPERATION AT THE MAXIMUM SPEED AT WHICH THE MACHINE WILL OPERATE. FAILURE TO OBSERVE THESE PRECAUTIONS COULD RESULT IN BODILY INJURY.

- Determine the drive motor output horsepower and continuous torque over the total speed range and the starting torque requirements.
- Select the type of motor and drive.
- Using the following graphs for the type of motor selected, confirm that the required load torque from the motor selected falls within the “acceptable region” of the graph.

Drive Comparison Chart

Use this chart as a quick, basic reference guide to help you determine the drive best suited for your application needs.

	Standard AC	Vector AC
Speed Regulation	1%	0.01%
Speed Range	10:1	>1000:1
Encoder Required?	No	Yes, for best performance
Constant HP Range	1.5:1	4:1
Starting Torque	100 to 150%	150 to 200%
High-Speed Capability (1)	<6000	<6000
Regeneration	Snubber/Line Regeneration	Snubber/Line Regeneration
Dynamic Braking w/o Regulator	No	No

(1) Speed rating in RPM with standard motors.
(2) Dependent on encoder or tachometer used.

Long Motor Leads

The wire leads that connect the motor to the control are critical in terms of sizing, shielding and the cable characteristics. Short cable runs are usually trouble free but fault-monitoring circuitry can produce numerous faults when long cables (over 100 feet) are used. For 100 to 300 ft., a reactor is recommended if the motor does not have ISR wire. Over 300 ft., Baldor recommends adding an optional load reactor to the output of the control. For reactors, refer to pages 110-111.

The load reactor and/or common mode choke should be placed in close physical proximity to the control. Unexpected faults may occur due to excessive charging current required for motor cable capacitance.

If you use long motor leads and experience unexpected trips due to current overload conditions and are not sure how to correctly size and connect the optional load reactors, please contact your Baldor representative.

Application Information – VS1 Drives

Graphs 1 through 4 show typical constant torque speed range curves with general purpose V/Hz regulation.

Graphs 1 and 2 are also typical for V/Hz drives.

Continuous motor performance for constant torque to base speed and constant horsepower above base speed. Wider constant torque ranges and/or horsepowers are available but application assistance will be required.

Graph 1:
10:1 Constant Torque

This graph applies for the following motors used with an AC PWM drive:

- Super-E® (Modified); contact Product Marketing for further details
- Explosion-proof energy efficient motors
  1/3-150 HP (check motor nameplate to verify CT rating)
- TENV motors

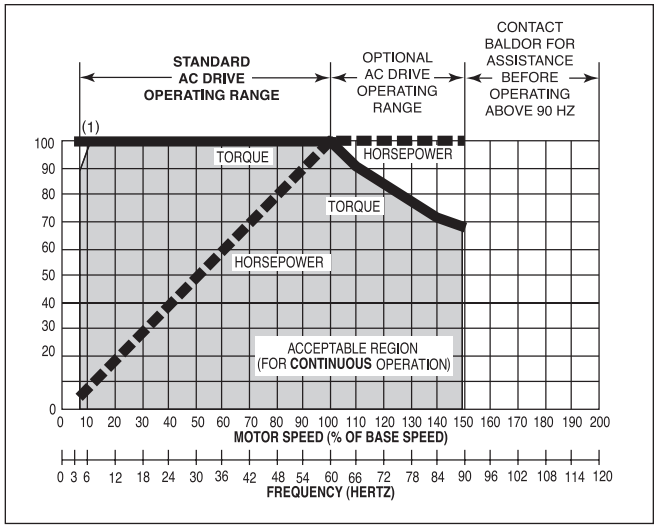

Graph 2:
4:1 Constant Torque

This graph applies for the following motors used with an AC PWM drive:

- TENV and TEFC energy and premium efficient motors 1-350 HP
- TENV easy-clean washdown duty motors
- Explosion proof energy efficient motors
  1-1/2 - 150 HP (check motor nameplate to verify CT ratio)

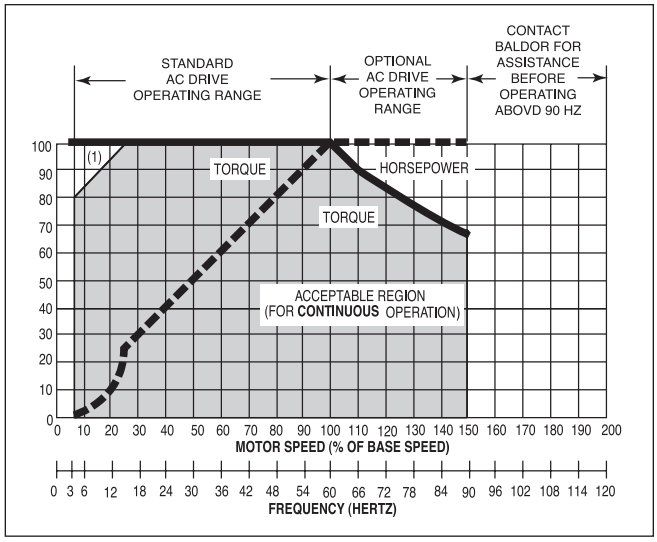

(1) Continuous operation in this region is not recommended and may result in reduced motor life.

BALDOR

Application Information – VS1 Drives

Graph 3:
2:1 Constant Torque

For use with explosion-proof energy efficient motors 1-1/2 - 150 Hp (check motor nameplate to verify CT ratio).

(1) Continuous operation in this region is not recommended and may result in reduced motor life.

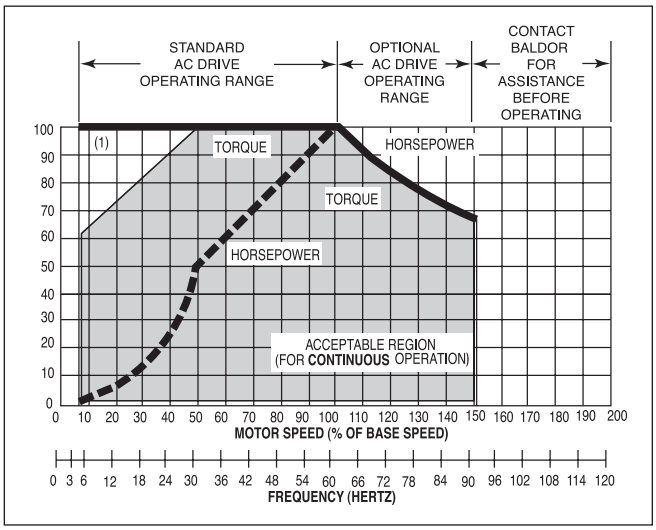

Graph 4:
Inverter Duty AC Motors

(TENV, TEAO-BC and DPFV enclosures)

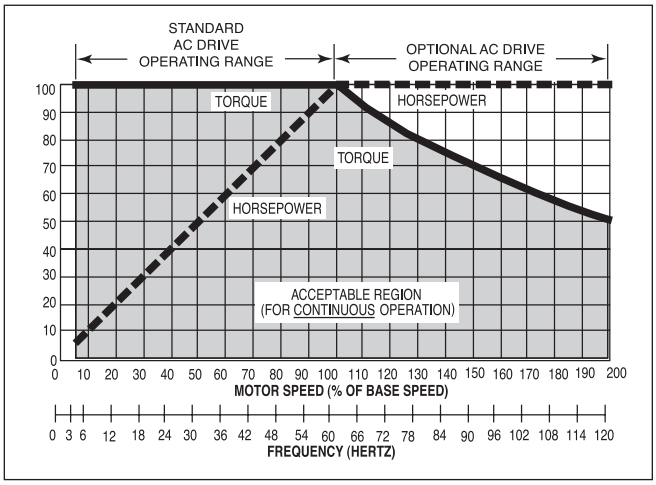

Graph 5:
Vector Duty Induction motors

(TENV, TEAO-BC and DPG-FV enclosures)
with encoder feedback

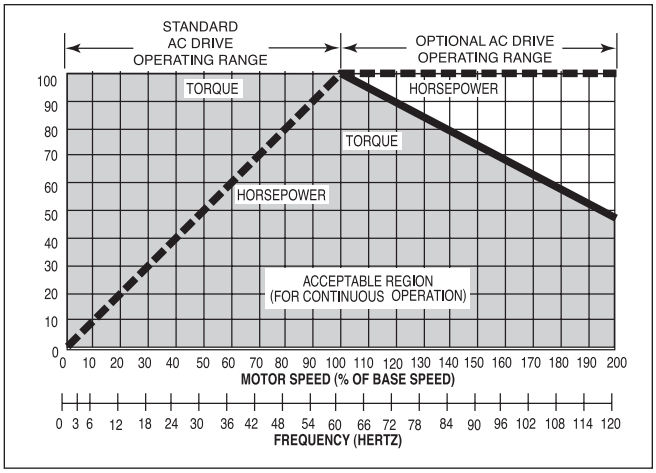

Application Information – VS1 Drives

Sizing the AC Drive

The capabilities of the AC drive are determined by its output current rating. The drive chosen must have a continuous current rating equal to or more than the maximum motor load current. Be sure to consider all loads including startup acceleration.

Single Motor and Drive Applications

NEMA design B motors will generally perform as shown in the engineering data section. Note that all references to HP are for single motor, standard NEMA B, 1.0 service factor, non-explosion proof induction motors only. Contact your Baldor Sales Office for application assistance if other motors are to be used.

General Sizing Method for use with Multiple Induction Motors

To size the 6 to 60 Hz drive for multiple motor applications or for any applications for 6 to 120 Hz, the following procedure is used.

1. Examine each motor to be driven and determine motor full-load amperes at line voltage. Determine the total full-load current requirements for all motor(s) to be controlled by the drive.
2. To the current determined in step one, add the high currents of any overloads which may exist – acceleration peak load, etc., – and determine maximum short-term load at line voltage. (Note: Motor acceleration is by linear timed-rate acceleration control. Therefore, locked-rotor amperes normally associated with across-the-line starting of AC motors are not encountered.)
3. Select the AC drive rating from the table with a current capacity that will support the required currents as calculated in the previous steps.
4. If other than NEMA Design B – 1.0 Service Factor induction motors are to be used, or if explosion proof listed motors are required contact your Baldor Sales Office for application assistance.

BALDOR

Application Information – VS1 Drives

Defining loads

Torque and horsepower considerations in calculating horsepower.

Calculating Horsepower

For rotating objects:

$$HP = \frac{TN}{63{,}000}$$ where: T = Torque (lb-in), N = Speed (RPM)

or:

$$HP = \frac{TN}{5250}$$ where: T = Torque (lb-ft), N = Speed (RPM)

For objects in linear motion:

$$HP = \frac{FV}{396{,}000}$$ where: F = Force (lb), V = Velocity (in/min)

or:

$$HP = \frac{FV}{33{,}000}$$ where: F = Force (lb), V = Velocity (FPM)

Centrifugal Applications

Affinity laws for centrifugal applications:

$$\frac{FLOW_1}{FLOW_2} = \frac{RPM_1}{RPM_2}$$

$$\frac{PRES_1}{PRES_2} = \frac{(RPM_1)^2}{(RPM_2)^2}$$

$$\frac{BHP_1}{BHP_2} = \frac{RPM_1{}^3}{RPM_2{}^3}$$

For pumps:

$$BHP = \frac{GPM \times ft \times (Specific\ Gravity)}{3960 \times (Efficiency\ of\ Pump)}$$

$$BHP = \frac{GPM \times PSI \times (Specific\ Gravity)}{1713 \times (Efficiency\ of\ Pump)}$$

For fans and blowers:

$$BHP = \frac{CFM \times PSF}{33000 \times (Efficiency\ of\ Fan)}$$

$$BHP = \frac{CFM \times PIW}{6344 \times (Efficiency\ of\ Fan)}$$

$$BHP = \frac{CFM \times PSI}{229 \times (Efficiency\ of\ Fan)}$$

Where

BHP = Brake horsepower
GPM = Gallons per minute
ft = Feet
PSI = Pounds per square inch
Specific Gravity of water = 1.0
PSF = Pounds per square foot

Calculating Accelerating Force for Linear Motion

The following formula may be useful to calculate the approximate accelerating force required for linear motion. However, before sizing the drive, add the torque required to accelerate the motor rotor, gears, pulleys, etc., to the linear-motion accelerating force converting to torque.

$$\text{Acceleration Force (F)} = \frac{WV}{1933t}$$

where:
W = Weight (lb)
V = Change in Velocity (FPM)
t = Time (seconds)

Calculating Accelerating Torque for Rotary Motion

High inertia loads may require higher torque for acceleration than is required to maintain a desired running speed.

The formula to calculate accelerating torque of a rotating member:

$$T = \frac{(WK^2)\ (N)}{308t}$$

where:
T = Accelerating torque (lb-ft)
WK^2 = Total inertia (lb-ft^2) that the motor must accelerate. This value includes motor rotor, gearing, shafting and load.
N = Change in speed required (RPM)
t = Time from original speed to set speed

The same formula can also be used to determine the minimum accelerating time of a given drive:

$$t = \frac{(WK^2)\ (N)}{308t}$$

WK^2 is calculated based on the radius of gyration, not diameter. Be cautious in converting from metric units, which are often based on diameter.

Other Useful Formulas

Torque = Force x Radius

$$\text{Reflected } WK^2 \text{ through a reducer (gear or belt)} = \frac{WK^2 \text{ of Load}}{(\text{Reduction Ratio})^2}$$

$$RPM = \frac{FPM}{.262 \times \text{Diameter (Inches)}}$$

For AC induction motors:

$$\text{Synchronous RPM} = \frac{\text{Hertz} \times 120}{\text{Number of Poles}}$$

$$\text{Percent Slip} = \frac{(\text{Synchronous RPM - Full Load RPM}) \times 100}{\text{Synchronous RPM}}$$

Kilowatts (KW) = Horsepower (HP) x .746

Conversions

One inch = 25.4 millimeters
One pound = .453 kilograms
Temp. F = 9/5 (C)+32
Temp. C = 5/9 (F-32)
One lb-ft2 = 4.21 x 10^{-2} kg-m^2
One Newton Meter = .738 lb-ft

Application Information – VS1 Drives

Definitions of NEMA Enclosures

The following descriptions are a digest from NEMA Standard Publication 250 (1985) and provides definitions of various control enclosures.

Type 1 – General Purpose Indoor, Non-Ventilated and Ventilated Enclosures

Type 1 enclosures are intended for use indoors, primarily to prevent accidental contact of personnel with the enclosed equipment, in areas where unusual service conditions do not exist. In addition, they provide protection against falling dirt.

Type 2 – Drip-Proof Indoor, Non-Ventilated and Ventilated Enclosures

Type 2 enclosures are intended for use indoors to protect the enclosed equipment against falling noncorrosive liquids and falling dirt. They shall have provision for drainage. If provision is made for the entrance of conduit at the top, it shall consist of a conduit hub or the equivalent. When completely and properly installed, these enclosures shall prevent the entrance of dripping liquid at a higher level than the lowest live part within the enclosure.

Type 3 – Dust-Tight and Sleet (Ice) Resistant Outdoor, Non-Ventilated Enclosures

Type 3 enclosures are intended for use outdoors to protect the enclosed equipment against windblown dust and water. They are not sleet (ice) proof. They shall have conduit hubs or equivalent provision for water-tight connection at the conduit entrance, mounting means external to the equipment cavity, and provision for locking.

Type 3R – Rainproof and Sleet (Ice) Resistant Outdoor, Non-Ventilated Enclosures

Type 3R enclosures are intended for use outdoors to protect the enclosed equipment against rain and meet the requirements of Underwriters' Laboratories, Inc. applying to "Rain-tight" Enclosures. They are not dust-, snow- nor sleet- (ice) proof. They shall have a conduit hub or equivalent provision for water-tight connection at the conduit entrance when the conduit enters at a level higher than the lowest live part, provision for locking, and provision for drainage. When completely and properly installed, these enclosures shall prevent the entrance of rain at a level higher than the lowest live part.

Type 3S – Dust-Tight, Rain-Tight and Sleet (Ice) Proof, Outdoor, Non-Ventilated Enclosures

Type 3S enclosures are intended for use outdoors to protect the enclosed equipment against windblown dust and water and to provide for its operation when the enclosure is covered by external ice or sleet. These enclosures do not protect the enclosed equipment against malfunction resulting from internal icing; where this is a requirement, the apparatus manufacturer should be consulted. These enclosures shall have conduit hubs or equivalent provision for water-tight connection at the conduit entrance, mounting means external to the equipment cavity, and provision for locking. In addition, they shall have sleet-(ice) proof operating mechanisms, the ability to support the additional weight of the ice, and the ability to withstand removal of the ice by a hand tool to permit access to the enclosure interior.

Type 4 – Water-Tight and Dust-Tight, Indoor and Outdoor Non-Ventilated Enclosures

Type 4 enclosures are intended for use indoors to protect the enclosed equipment against splashing water, seepage of water, falling or hose-directed water, and severe external condensation. They shall have conduit hubs or equivalent provision for water-tight connection at the conduit entrance and mounting means external to the equipment cavity.

Type 4X – Water-Tight and Dust-Tight and Corrosion-Resistant, Indoor and Outdoor Non-Ventilated Enclosures

Type 4X enclosures have the same provisions as Type 4 enclosures and, in addition, are corrosion-resistant.

Type 5 – Superseded by Type 12 for Control Apparatus

Type 6 – Submersible, Water-Tight, Dust-Tight and Sleet (Ice) Resistant, Indoor and Outdoor Non-Ventilated Enclosures

Type 6 enclosures are intended for use indoors or outdoors where occasional submersion is encountered. They shall protect the enclosed equipment against a static head of water of 6 ft. for 30 minutes; dust, splashing or external condensation of noncorrosive liquids, falling or hose directed water, lint and seepage. They are not sleet (ice) proof. They shall have conduit hubs or equivalent provision for water-tight connection at the conduit entrance and mounting means external to the equipment cavity.

Type 7, 8, 9 and 10 – Enclosures

These enclosures are for use in hazardous locations.

Type 11 – Corrosion-Resistant and Drip-Proof, Oil-Immersed, Indoor Non-Ventilated Enclosures

Type 11 enclosures are corrosion-resistant and are intended for use indoors to protect the enclosed equipment against dripping, seepage and external condensation of corrosive liquids. In addition, they protect the enclosed equipment against the corrosive effects of fumes and gases by providing for immersion of the equipment in oil. They shall have conduit hubs or equivalent provision for water-tight connection at the conduit entrance and mounting means external to the equipment cavity.

Type 12 – Industrial Use, Dust-Tight and Drip-Tight, Indoor Non-Ventilated Enclosures

Type 12 enclosures are intended for use indoors to protect the enclosed equipment against fibers, flyings, lint, dust, and dirt, and light splashing, seepage, dripping and external condensation of noncorrosive liquids. There shall be no holes through the enclosure and

Application Information – VS1 Drives

Type 12 (continued) –

No conduit knockouts or conduit openings, except that oil-tight or dust-tight mechanisms may be mounted through holes in the enclosure when provided with oil-resistant gaskets. Doors shall be provided with oil-resistant gaskets. In addition, enclosures for combination controllers shall have hinged doors which swing horizontally and require a tool to open.

When intended for wall mounting, Type 12 enclosures shall have mounting means external to the equipment cavity, captive closing hardware, and provision for locking.

When intended for floor mounting, Type 12 enclosures shall have closed bottoms, captive closing hardware, and provision for locking.

Ventilated Enclosures

Ventilated enclosures have the same provisions as nonventilated enclosures, except that they contain both dust-tight and nondust-tight sections or compartments. Only the nondust-tight sections or compartments are ventilated and are not subject to the dust test.

Type 13 – Oil-Tight and Dust-Tight, Indoor, Non-Ventilated Enclosures

Type 13 enclosures are intended for use indoors primarily to house pilot devices such as limit switches, foot switches, push buttons, selector switches, pilot lights, etc., and to protect these devices against lint and dust, seepage, external condensation, and spraying of water, oil or coolant. They shall have oil-resistant gaskets and, when intended for wall or machine mounting, shall have mounting means external to the equipment cavity. They shall have no conduit knockouts or unsealed openings providing access into the equipment cavity. All conduit openings shall have provision for oil-tight conduit entry.

AC Drive Lead Length

Standard AC Drives utilize IGBT Technology for rapid switching of PWM devices to produce accurate sinusoidal drive outputs. Typically operating at carrier frequencies of 8 kHz, low motor acoustic noise is achieved. However, PWM devices can also cause undesirable side effects such as motor stress, high peak voltage and possible reflected waves that exacerbate the peak voltage problems.

Baldor's matching drive/motor packages offer superior design and proven performance. All drive/motor combinations have been tested for dynamic stability. When applied properly, motor stress effects and high peak voltage should be minimal.

See individual product sections in this catalog for information about recommended lead lengths between drives and motors. Additional external filters can be specified to extend lead lengths.

DB Sizing Procedure

This sizing procedure (with different formulas) is used to determine the required DB Hardware capacity for general industrial machinery or hoisting applications.

General Machinery

To determine regenerated watts (Wr), use the following formulas:

Determine T_{DEC}:

$$T_{DEC} = \frac{\Delta RPM \times WK^2}{308 \times t}$$

Where:

TDEC =	Deceleration torque in lb-ft
ΔRPM =	Change in speed
WK^2 =	Inertia in lb-ft2
t =	Time in seconds

Determine D_r:

$$\frac{\text{Brake Time Required for Deceleration}}{\text{Total Cycle Time}}$$

D_r = Duty Cycle =

Determine W_r:

$W_r = T_{DEC} \times (S_r - S_m) \times Dr_x (0.0712)$

Where:

Wr =	Regenerated watts
TDEC =	Deceleration torque in lb-ft
Sr =	Maximum speed regenerating (in RPM)
Sm =	Minimum speed regenerating (in RPM)
Dr =	Duty cycle

Determine part number of external resistor assembly to order: Refer to Tables in Section 3 of this manual to select the part number

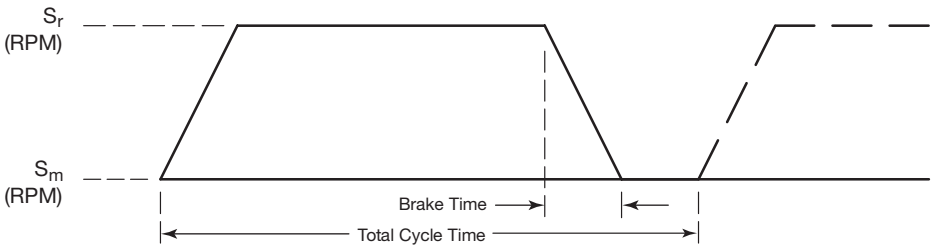

Application Information – VS1 Drives

Sizing External Braking Hardware

If the results of step 5 indicate the need for external braking hardware, the following additional steps will assist in properly sizing an external brake unit. To determine if the brake unit meets the application's needs, three items must be determined: average power generation, peak power, and peak regeneration current.

6) Average power generation is calculated as follows, assuming the deceleration rate is linear:

$$Hp_{regen} = \frac{(T_R * (N2+N1) / 2 * t1}{5250 * t2}$$

7) Convert the regeneration HP in watts (Average Power).

$$Watts_{regen} = HP_{regen} * 746$$

8) Peak regeneration watts can be obtained by using the HP_{regen} calculated in step 4 and converting to watts. This peak regeneration (watts) energy must be less than the peak watt rating of the braking unit.

Determining the Duty Cycle

9) The braking duty cycle (percentage of time during an operating cycle when braking occurs), must be determined. A typical operating cycle consists of an acceleration mode, a running at set speed mode, a deceleration mode and finally a rest or zero speed mode. Braking occurs during the deceleration mode.

$$\text{Duty Cycle} = \frac{\text{Braking time}}{\text{Cycle time}}$$

A lower duty cycle percentage will allow more time for resistor cool-down. This will affect resistor sizing and selection. A duty cycle of 50% or less makes snubber brake control a good solution. For duty cycles near or at 100%, line regeneration control is more suitable.

Calculating the Regenerative Current

10) The regenerative current must be compared to the current rating of the braking unit. The regenerative current must not exceed the rated amps of the braking unit. Using the braking HP from step 4, the following rule-of-thumb formulas can be used to calculate the regenerative current:

460 V Drives $I_{regen} = 1.2 * HP_{regen}$
230 V Drives $I_{regen} = 2.4 * HP_{regen}$

BALDOR

Drives Cross Reference

RE Part Number	VS1 Part Number	List Price	VS1 Part Number	List Price
MD60	**IP20**		**NEMA 12**	
115V 1ph input	**VS1ST 115V 1ph input**		**VS1MX 115V 1ph input**	
6MDVN-1P5101	VS1ST10P5-0 (2)	$415	VS1MX10P5-2 (3)	$591
6MDVN-2P3101	VS1ST10P5-0 (2)	$415	VS1MX10P5-2 (3)	$591
6MDVN-4P5101	VS1ST11-0 (2)	$485	VS1MX11-2 (3)	$614
6MDVN-6P0101	VS1ST11P5-0T (2)	$596	VS1MX11P5-2T (3)	$768
MD60 230V 1ph input w/filter	**VS1ST 230V 1ph input w/filter**		**VS1MX 230V 1ph input w/filter**	
6MDAN-1P5111	VS1ST80P5-0F (2)	$351	VS1MX80P5-2F (3)	$566
6MDAN-2P3111	VS1ST80P5-0F (2)	$351	VS1MX80P5-2F (3)	$566
6MDAN-4P5111	VS1ST81-0F (2)	$447	VS1MX81-2F (3)	$587
6MDAN-8P0111	VS1ST82-0F (2)	$574	VS1MX82-2F (3)	$735
MD60 230V 1ph input	**VS1ST 230V 1ph input**		**VS1MX 230V 1ph input**	
6MDAN-1P5101	VS1ST80P5-0 (2)	$334	VS1MX80P5-2 (3)	$514
6MDAN-2P3101	VS1ST80P5-0 (2)	$334	VS1MX80P5-2 (3)	$514
6MDAN-4P5101	VS1ST81-0 (2)	$362	VS1MX81-2 (3)	$534
6MDAN-8P0101	VS1ST82-0 (2)	$436	VS1MX82-2 (3)	$668
MD60 230V	**VS1MD 230V**			
6MDBN-1P5101	VS1MD20P5 (1)	$447		
6MDBN-2P3101	VS1MD20P5 (1)	$447		
6MDBN-4P5101	VS1MD21 (1)	$464		
6MDBN-8P0101	VS1MD22 (1)	$581		
6MDBN-012101	VS1MD23 (1)	$670		
6MDBN-017101	VS1MD25 (1)	$860		
MD60 460V	**VS1MD 460V**			
6MDDN-1P4101	VS1MD40P5 (1)	$534		
6MDDN-2P3101	VS1MD41 (1)	$559		
6MDDN-4P0101	VS1MD42 (1)	$676		
6MDDN-6P0101	VS1MD43 (1)	$782		
6MDDN-8P7101	VS1MD45 (1)	$972		
MD65	**IP20**		**NEMA 12**	
MD65 115V 1ph input	**VS1ST 115V 1ph input**		**VS1MX 115V 1ph input**	
6MDVN-2P3102	VS1ST10P5-0 (2)	$415	VS1MX10P5-2 (3)	$591
6MDVN-5P0102	VS1ST11-0 (2)	$485	VS1MX11-2 (3)	$614
6MDVN-6P0102	VS1ST11P5-0T (2)	$596	VS1MX11P5-2T (3)	$768
MD65 230V 1ph input w/filter	**VS1ST 230V 1ph input w/filter**		**VS1MX 230V 1ph input w/filter**	
6MDAN-2P3112	VS1ST80P5-0F (2)	$351	VS1MX80P5-2F (3)	$566
6MDAN-5P0112	VS1ST81-0F (2)	$447	VS1MX81-2F (3)	$587
6MDAN-8P0112	VS1ST82-0F (2)	$574	VS1MX82-2F (3)	$735
6MDAN-012112	VS1ST83-0TF (2)	$649	VS1MX83-2TF (3)	$848
MD65 230V 1ph input	**VS1ST 230V 1ph input**		**VS1MX 230V 1ph input**	
6MDAN-2P3102	VS1ST80P5-0 (2)	$334	VS1MX80P5-2 (3)	$514
6MDAN-5P0102	VS1ST81-0 (2)	$362	VS1MX81-2 (3)	$534
6MDAN-8P0102	VS1ST82-0 (2)	$436	VS1MX82-2 (3)	$668
6MDAN-012102	VS1ST83-0T (2)	$606	VS1MX83-2T (3)	$771
MD65 230V	**VS1MD 230V**			
6MDBN-2P3102	VS1MD20P5 (1)	$319		
6MDBN-5P0102	VS1MD21 (1)	$464		
6MDBN-8P0102	VS1MD22 (1)	$581		
6MDBN-012102	VS1MD23 (1)	$670		
6MDBN-017102	VS1MD25 (1)	$860		
6MDBN-024102	VS1MD27 (3)	$1,255		
6MDBN-033102	VS1MD210 (3)	$1,489		
MD65 460V	**VS1MD 460V**			
6MDDN-1P4102	VS1MD40P5 (1)	$534		
6MDDN-2P3102	VS1MD41 (1)	$559		
6MDDN-4P0102	VS1MD42 (1)	$676		
6MDDN-6P0102	VS1MD43 (1)	$782		
6MDDN-010102	VS1MD45 (1)	$972		
6MDDN-012102	VS1MD47 (3)	$1,257		
6MDDN-017102	VS1MD410 (3)	$1,502		
6MDDN-024102	VS1MD415 (3)	$1,878		
MD65 575V	**VS1SP 575V**			
6MDEN-1P7102	VS1SP51-1B (3)	$1,322		
6MDEN-3P0102	VS1SP52-1B (3)	$1,603		
6MDEN-4P2102	VS1SP53-1B (3)	$1,943		
6MDEN-6P6102	VS1SP55-1B (3)	$2,106		
6MDEN-9P9102	VS1SP57-1B (3)	$2,668		
6MDEN-012102	VS1SP510-1B (3)	$2,926		
6MDEN-019102	VS1SP515-1B (3)	$3,745		

(1) Drive is not supplied with DIN Rail kit. Order optional kit if required.
(2) VS1ST model number not available in NEMA 1
(3) Model number not available with DIN Rail capability

Drives Cross Reference

RE Part Number	VS1 Part Number	List Price
SP500		
115V 1ph input 115 volt 3ph output		
1SU11001	VS1MX11-2	$614
SP500 230V	**VS1MX 230V**	
1SU21001	VS1MX21-2	$547
1SU21002	VS1MX22-2	$601
1SU21003	VS1MX23-2T	$693
1SU21005	VS1MX25-4T	$1,075
1SU24001	VS1MX21-4	$632
1SU24002	VS1MX22-4	$654
1SU24003	VS1MX23-4T	$754
1SU24005	VS1MX25-4T	$1,075
SP500 460V	**VS1MX 460V**	
1SU41001	VS1MX41-2	$643
1SU41002	VS1MX42-2	$777
1SU41003	VS1MX43-2T	$899
1SU41005	VS1MX45-2T	$1,118
1SU41007	VS1MX47-4T	$1,726
1SU41010	VS1MX410-4T	$1,861
1SU41015	VS1PF415-1	$1,596
1SU41020	VS1PF420-9 + VS1PFNM1C	$2,050
1SU44001	VS1MX41-4	$699
1SU44002	VS1MX42-4	$845
1SU44003	VS1MX43-4T	$978
1SU44005	VS1MX45-4T	$1,215
1SU44007	VS1MX47-4T	$1,726
1SU44010	VS1MX410-4T	$1,861
1SU42015	Keep – Do not replace	—
1SU42020	Keep – Do not replace	—
SP500 575 volt input	**VS1SP 575V**	
1SU51001	VS1MXS51-2T	$961
1SU51002	VS1MXS52-2T	$1,163
1SU51003	VS1MXS53-2T	$1,344
1SU51005	VS1MXS55-2T	$1,671
1SU51007	VS1MXS57-2T	$2,158
1SU51010	VS1SP510-1B	$2,926
1SU54001	VS1SP51-4B	$1,463
1SU54002	VS1SP52-4B	$1,662
1SU54003	VS1SP53-4B	$2,024
1SU54005	VS1SP55-4B	$2,317
1SU54007	VS1SP57-4B	$3,043
1SU54010	VS1SP510-4B	$3,218

BALDOR

Drives Cross Reference

Inverter Drives – 230 Volts - Three Phase NEMA 1 Enclosure

Voltage	Heavy Duty HP	Series 15H Catalog Number	VS1SP Catalog Number	VS1SP List Price
230	1	ID15H201–E	VS1SP21-1B	$1,000
230	2	ID15H202–E	VS1SP22-1B	$1,138
230	3	ID15H203–E	VS1SP23-1B	$1,330
230	5	ID15H205–E	VS1SP25-1B	$1,521
230	7.5	ID15H207–E	VS1SP27-1B	$1,904
230	10	ID15H210–E	VS1SP210-1B	$2,681
230	15	ID15H215–E	VS1SP215-1B	$3,191
230	20	ID15H220–E0	VS1SP220-1B	$4,255
230	25	ID15H225–E0	VS1SP225-1B	$5,106
230	30	ID15H230–E0	VS1SP230-1B	$6,596
230	40	ID15H240–M0	VS1SP240-1B	$7,872
230	50	ID15H250-M0	VS1SP250-1B	$10,000
230	60	—	VS1SP260-1B	$12,703

Inverter Drives – 460 Volts - Three Phase NEMA 1 Enclosure

Voltage	Heavy Duty HP	Series 15H Catalog Number	VS1SP Catalog Number	VS1SP List Price
460	1	ID15H401–E	VS1SP41-1B	$1,202
460	2	ID15H402–E	VS1SP42-1B	$1,457
460	3	ID15H403–E	VS1SP43-1B	$1,766
460	5	ID15H405–E	VS1SP45-1B	$1,915
460	7.5	ID15H407–E	VS1SP47-1B	$2,426
460	10	ID15H410–E	VS1SP410-1B	$2,660
460	15	ID15H415–E	VS1SP415-1B	$3,404
460	20	ID15H420–E0	VS1SP420-1B	$4,043
460	25	ID15H425–E0	VS1SP425-1B	$5,000
460	30	ID15H430–E0	VS1SP430-1B	$6,064
460	40	ID15H440–E0	VS1SP440-1B	$7,447
460	50	ID15H450–E0	VS1SP450-1B	$8,936
460	60	ID15H460-E0	VS1SP460-1B	$9,998
460	75	ID15H475-E0	VS1SP475-1B	$11,596
460	100	ID15H4100-E0	VS1SP4100-1B	$13,404
460	125	ID15H4125-E0	VS1SP4125-1B	$14,362

Drives Cross Reference

Inverter Drives – 575 Volts - Three Phase NEMA 1 Enclosure

Voltage	Heavy Duty HP	Series 15H Catalog Number	VS1SP Catalog Number	VS1SP List Price
575	1	ID15H501–E	VS1SP51-1B	$1,322
575	2	ID15H502–E	VS1SP52-1B	$1,603
575	3	ID15H503–E	VS1SP53-1B	$1,943
575	5	ID15H505–E	VS1SP55-1B	$2,106
575	7.5	ID15H507–E	VS1SP57-1B	$2,668
575	10	ID15H510–E	VS1SP510-1B	$2,926
575	15	ID15H515–E	VS1SP515-1B	$3,745
575	20	ID15H520–EO	VS1SP520-1B	$4,447
575	25	ID15H525–EO	VS1SP525-1B	$5,500
575	30	ID15H530–EO	VS1SP530-1B	$6,670
575	40	ID15H540–EO	VS1SP540-1B	$8,191
575	50	ID15H550–EO	VS1SP550-1B	$9,830
575	60	ID15H560-EO	VS1SP560-1B	$11,000
575	75	ID15H575-EO	VS1SP575-1B	$12,755
575	100	ID15H5100-EO	VS1SP5100-1B	$14,745
575	125	ID15H5125-EO	VS1SP5125-1B	$15,798

Inverter Drives – 230 Volts - Three Phase Washdown Enclosure

Voltage	Heavy Duty HP	Series 15H Catalog Number	VS1SP Catalog Number	VS1SP List Price
230	1	ID15H201–W	VS1SP21-4B	$1,074
230	2	ID15H202–W	VS1SP22-4B	$1,223
230	3	ID15H203–W	VS1SP23-4B	$1,429
230	5	ID15H205–W	VS1SP25-4B	$1,649
230	7.5	ID15H207–W	VS1SP27-4B	$2,043
230	10	ID15H210–W	—	—
230	15	ID15H215–W	—	—

Inverter Drives – 460 Volts - Three Phase Washdown Enclosure

Voltage	Heavy Duty HP	Series 15H Catalog Number	VS1SP Catalog Number	VS1SP List Price
460	1	ID15H401–W	VS1SP41-4B	$1,330
460	2	ID15H402–W	VS1SP42-4B	$1,511
460	3	ID15H403–W	VS1SP43-4B	$1,840
460	5	ID15H405–W	VS1SP45-4B	$2,106
460	7.5	ID15H407–W	VS1SP47-4B	$2,766
460	10	ID15H410–W	VS1SP410-4B	$2,926
460	15	ID15H415-W	—	—

Inverter Drives – 575 Volts - Three Phase Washdown Enclosure

Voltage	Heavy Duty HP	Series 15H Catalog Number	VS1SP Catalog Number	VS1SP List Price
575	1	ID15H501–W	VS1SP51-4B	$1,463
575	2	ID15H502–W	VS1SP52-4B	$1,662
575	3	ID15H503–W	VS1SP53-4B	$2,024
575	5	ID15H505–W	VS1SP55-4B	$2,317
575	7.5	ID15H507–W	VS1SP57-4B	$3,043
575	10	ID15H510–W	VS1SP510-4B	$3,218
575	15	ID15H515-W	—	—

BALDOR

Drives Cross Reference

Inverter Drives – 115/230 Volts - Single Phase NEMA 1 Enclosure

Voltage	Heavy Duty HP	Series H2 Inverter Catalog Number	VS1SP Catalog Number	VS1SP List Price
115/230	1	IHH601-E	VS1SP61-1B	$1,100
115/230	2	IHH602-E	VS1SP62-1B	$1,252
115/230	3	IHH603-E	VS1SP63-1B	$1,463

Inverter Drives – 230 Volts - Three Phase NEMA 1 Enclosure

Voltage	Heavy Duty HP	Series H2 Inverter Catalog Number	VS1SP Catalog Number	VS1SP List Price
230	1	IHH201-E	VS1SP21-1B	$1,000
230	2	IHH202-E	VS1SP22-1B	$1,138
230	3	IHH203-E	VS1SP23-1B	$1,330
230	5	IHH205-E	VS1SP25-1B	$1,521
230	7.5	IHH207-E	VS1SP27-1B	$1,904
230	10	IHH210-E	VS1SP210-1B	$2,681
230	15	IHH215-E	VS1SP215-1B	$3,191
230	20	IHH220-E	VS1SP220-1B	$4,255
230	25	IHH225-E	VS1SP225-1B	$5,106
230	30	IHH230-E	VS1SP230-1B	$6,596
230	40	IHH240-E	VS1SP240-1B	$7,872
230	50	IHH250-E	VS1SP250-1B	$10,000
230	60	IHH260-E	VS1SP260-1B	$12,703

Inverter Drives – 460 Volts - Three Phase NEMA 1 Enclosure

Voltage	Heavy Duty HP	Series H2 Inverter Catalog Number	VS1SP Catalog Number	VS1SP List Price
460	1	IHH401-E	VS1SP41-1B	$1,202
460	2	IHH402-E	VS1SP42-1B	$1,457
460	3	IHH403-E	VS1SP43-1B	$1,766
460	5	IHH405-E	VS1SP45-1B	$1,915
460	7.5	IHH407-E	VS1SP47-1B	$2,426
460	10	IHH410-E	VS1SP410-1B	$2,660
460	15	IHH415-E	VS1SP415-1B	$3,404
460	20	IHH420-E	VS1SP420-1B	$4,043
460	25	IHH425-E	VS1SP425-1B	$5,000
460	30	IHH430-E	VS1SP430-1B	$6,064
460	40	IHH440-E	VS1SP440-1B	$7,447
460	50	IHH450-E	VS1SP450-1B	$8,936
460	60	IHH460-E	VS1SP460-1B	$9,998
460	75	IHH475-E	VS1SP475-1B	$11,596
460	100	IHH4100-E	VS1SP4100-1B	$13,404
460	125	IHH4125-E	VS1SP4125-1B	$14,362

Drives Cross Reference

Inverter Drives – 575 Volts - Three Phase NEMA 1 Enclosure

Voltage	Heavy Duty HP	Series H2 Inverter Catalog Number	VS1SP Catalog Number	VS1SP List Price
575	1	IHH501-E	VS1SP51-1B	$1,322
575	2	IHH502-E	VS1SP52-1B	$1,603
575	3	IHH503-E	VS1SP53-1B	$1,943
575	5	IHH505-E	VS1SP55-1B	$2,106
575	7.5	IHH507-E	VS1SP57-1B	$2,668
575	10	IHH510-E	VS1SP510-1B	$2,926
575	15	IHH515-E	VS1SP515-1B	$3,745
575	20	IHH520-E	VS1SP520-1B	$4,447
575	25	IHH525-E	VS1SP525-1B	$5,500
575	30	IHH530-E	VS1SP530-1B	$6,670
575	40	IHH540-E	VS1SP540-1B	$8,191
575	50	IHH550-E	VS1SP550-1B	$9,830
575	60	IHH560-E	VS1SP560-1B	$11,000
575	75	IHH575-E	VS1SP575-1B	$12,755
575	100	IHH5100-E	VS1SP5100-1B	$14,745
575	125	IHH5125-E	VS1SP5125-1B	$15,798

Inverter Drives – 115/230 Volts - Single Phase Washdown Enclosure

Voltage	Heavy Duty HP	Series H2 Inverter Catalog Number	VS1SP Catalog Number	VS1SP List Price
115/230	1	IHH601-W	VS1SP61-1B	$1,182
115/230	2	IHH602-W	VS1SP62-1B	$1,346
115/230	3	IHH603-W	VS1SP63-1B	$1,568

Inverter Drives – 230 Volts - Three Phase Washdown Enclosure

Voltage	Heavy Duty HP	Series H2 Inverter Catalog Number	VS1SP Catalog Number	VS1SP List Price
230	1	IHH201-W	VS1SP21-4B	$1,074
230	2	IHH202-W	VS1SP22-4B	$1,223
230	3	IHH203-W	VS1SP23-4B	$1,429
230	5	IHH205-W	VS1SP25-4B	$1,649
230	7.5	IHH207-W	VS1SP27-4B	$2,043

BALDOR

Drives Cross Reference

Inverter Drives – 460 Volts - Three Phase Washdown Enclosure

Voltage	Heavy Duty HP	Series H2 Inverter Catalog Number	VS1SP Catalog Number	VS1SP List Price
460	1	IHH401-W	VS1SP41-4B	$1,330
460	2	IHH402-W	VS1SP42-4B	$1,511
460	3	IHH403-W	VS1SP43-4B	$1,840
460	5	IHH405-W	VS1SP45-4B	$2,106
460	7.5	IHH407-W	VS1SP47-4B	$2,766
460	10	IHH410-W	VS1SP410-4B	$2,926

Inverter Drives – 575 Volts - Three Phase Washdown Enclosure

Voltage	Heavy Duty HP	Series H2 Inverter Catalog Number	VS1SP Catalog Number	VS1SP List Price
575	1	IHH501-W	VS1SP51-4B	$1,463
575	2	IHH502-W	VS1SP52-4B	$1,662
575	3	IHH503-W	VS1SP53-4B	$2,024
575	5	IHH505-W	VS1SP55-4B	$2,317
575	7.5	IHH507-W	VS1SP57-4B	$3,043
575	10	IHH510-W	VS1SP510-4B	$3,218

Drives Cross Reference

Vector Drives – 460 Volts - Three Phase NEMA 1 Enclosure

Voltage	Heavy Duty HP	Series 18H Catalog Number	VS1GV Catalog Number	VS1GV List Price
460	1	ZD18H401–E	VS1GV41-1B	$1,915
460	2	ZD18H402–E	VS1GV42-1B	$1,989
460	3	ZD18H403–E	VS1GV43-1B	$2,075
460	5	ZD18H405–E	VS1GV45-1B	$2,340
460	7.5	ZD18H407–E	VS1GV47-1B	$2,690
460	10	ZD18H410–E	VS1GV410-1B	$3,055
460	15	ZD18H415–E	VS1GV415-1B	$3,830
460	20	ZD18H420–E0	VS1GV420-1B	$4,469
460	25	ZD18H425–E0	VS1GV425-1B	$5,638
460	30	ZD18H430–E0	VS1GV430-1B	$6,596
460	40	ZD18H440–E0	VS1GV440-1B	$8,298
460	50	ZD18H450–E0	VS1GV450-1B	$9,787
460	60	ZD18H460-E0	VS1GV460-1B	$10,532
460	75	ZD18H475-E0	VS1GV475-1B	$12,340
460	100	ZD18H4100-E0	VS1GV4100-1B	$14,255
460	125	ZD18H4125-E0	VS1GV4125-1B	$15,106

Vector Drives – 575 Volts - Three Phase NEMA 1 Enclosure

Voltage	Heavy Duty HP	Series 18H Catalog Number	VS1GV Catalog Number	VS1GV List Price
575	1	ZD18H501–E	VS1GV51-1B	$2,106
575	2	ZD18H502–E	VS1GV52-1B	$2,188
575	3	ZD18H503–E	VS1GV53-1B	$2,282
575	5	ZD18H505–E	VS1GV55-1B	$2,574
575	7.5	ZD18H507–E	VS1GV57-1B	$2,959
575	10	ZD18H510–E	VS1GV510-1B	$3,361
575	15	ZD18H515–E	VS1GV515-1B	$4,213
575	20	ZD18H520–E0	VS1GV520-1B	$4,915
575	25	ZD18H525–E0	VS1GV525-1B	$6,202
575	30	ZD18H530–E0	VS1GV530-1B	$7,255
575	40	ZD18H540–E0	VS1GV540-1B	$9,128
575	50	ZD18H550–E0	VS1GV550-1B	$10,766
575	60	ZD18H560-E0	VS1GV560-1B	$11,585
575	75	ZD18H575-E0	VS1GV575-1B	$13,574
575	100	ZD18H5100-E0	VS1GV5100-1B	$15,681
575	125	ZD18H5125-E0	VS1GV5125-1B	$16,617

BALDOR

Drives Cross Reference

Vector Drives – 230 Volts - Three Phase Washdown Enclosure

Voltage	Heavy Duty HP	Series 18H Catalog Number	VS1GV Catalog Number	VS1GV List Price
230	1	ZD18H201–W	VS1GV21-4B	$1,504
230	2	ZD18H202–W	VS1GV22-4B	$1,713
230	3	ZD18H203–W	VS1GV23-4B	$1,996
230	5	ZD18H205–W	VS1GV25-4B	$2,309
230	7.5	ZD18H207–W	VS1GV27-4B	$2,869
230	10	ZD18H210–W	—	—
230	15	ZD18H215–W	—	—

Vector Drives – 460 Volts - Three Phase Washdown Enclosure

Voltage	Heavy Duty HP	Series 18H Catalog Number	VS1GV Catalog Number	VS1GV List Price
460	1	ZD18H401–W	VS1GV41-4B	$1,995
460	2	ZD18H402–W	VS1GV42-4B	$2,115
460	3	ZD18H403–W	VS1GV43-4B	$2,393
460	5	ZD18H405–W	VS1GV45-4B	$2,738
460	7.5	ZD18H407–W	VS1GV47-4B	$3,319
460	10	ZD18H410–W	VS1GV410-4B	$3,511
460	15	ZD18H415-W	—	—

Vector Drives – 575 Volts - Three Phase Washdown Enclosure

Voltage	Heavy Duty HP	Series 18H Catalog Number	VS1GV Catalog Number	VS1GV List Price
575	1	ZD18H501–W	VS1GV51-4B	$2,194
575	2	ZD18H502–W	VS1GV52-4B	$2,326
575	3	ZD18H503–W	VS1GV53-4B	$2,632
575	5	ZD18H505–W	VS1GV55-4B	$3,012
575	7.5	ZD18H507–W	VS1GV57-4B	$3,651
575	10	ZD18H510–W	VS1GV510-4B	$3,862
575	15	ZD18H515-W	—	—

Drives Cross Reference

Vector Drives – 115/230 Volts - Single Phase NEMA 1 Enclosure

Voltage	Heavy Duty HP	Series H2 Vector Catalog Number	VS1GV Catalog Number	VS1GV List Price
115/230	1	ZHH601-E	VS1GV61-1B	$1,545
115/230	2	ZHH602-E	VS1GV62-1B	$1,744
115/230	3	ZHH603-E	VS1GV63-1B	$1,943

Vector Drives – 230 Volts - Three Phase NEMA 1 Enclosure

Voltage	Heavy Duty HP	Series H2 Vector Catalog Number	VS1GV Catalog Number	VS1GV List Price
230	1	ZHH201-E	VS1GV21-1B	$1,404
230	2	ZHH202-E	VS1GV22-1B	$1,585
230	3	ZHH203-E	VS1GV23-1B	$1,766
230	5	ZHH205-E	VS1GV25-1B	$2,043
230	7.5	ZHH207-E	VS1GV27-1B	$2,309
230	10	ZHH210-E	VS1GV210-1B	$3,138
230	15	ZHH215-E	VS1GV215-1B	$3,836
230	20	ZHH220-E	VS1GV220-1B	$4,895
230	25	ZHH225-E	VS1GV225-1B	$5,745
230	30	ZHH230-E	VS1GV230-1B	$7,564
230	40	ZHH240-E	VS1GV240-1B	$8,723
230	50	ZHH250-E	VS1GV250-1B	$11,170
230	60	ZHH260-E	VS1GV260-1B	$14,303

Vector Drives – 460 Volts - Three Phase NEMA 1 Enclosure

Voltage	Heavy Duty HP	Series H2 Vector Catalog Number	VS1GV Catalog Number	VS1GV List Price
460	1	ZHH401-E	VS1GV41-1B	$1,915
460	2	ZHH402-E	VS1GV42-1B	$1,989
460	3	ZHH403-E	VS1GV43-1B	$2,075
460	5	ZHH405-E	VS1GV45-1B	$2,340
460	7.5	ZHH407-E	VS1GV47-1B	$2,690
460	10	ZHH410-E	VS1GV410-1B	$3,055
460	15	ZHH415-E	VS1GV415-1B	$3,830
460	20	ZHH420-E	VS1GV420-1B	$4,469
460	25	ZHH425-E	VS1GV425-1B	$5,638
460	30	ZHH430-E	VS1GV430-1B	$6,596
460	40	ZHH440-E	VS1GV440-1B	$8,298
460	50	ZHH450-E	VS1GV450-1B	$9,787
460	60	ZHH460-E	VS1GV460-1B	$10,532
460	75	ZHH475-E	VS1GV475-1B	$12,340
460	100	ZHH4100-E	VS1GV4100-1B	$14,255
460	125	ZHH4125-E	VS1GV4125-1B	$15,106

BALDOR

Drives Cross Reference

Vector Drives – 575 Volts - Three Phase NEMA 1 Enclosure

Voltage	Heavy Duty HP	Series H2 Vector Catalog Number	VS1GV Catalog Number	VS1GV List Price
575	1	ZHH501-E	VS1GV51-1B	$2,106
575	2	ZHH502-E	VS1GV52-1B	$2,188
575	3	ZHH503-E	VS1GV53-1B	$2,282
575	5	ZHH505-E	VS1GV55-1B	$2,574
575	7.5	ZHH507-E	VS1GV57-1B	$2,959
575	10	ZHH510-E	VS1GV510-1B	$3,361
575	15	ZHH515-E	VS1GV515-1B	$4,213
575	20	ZHH520-E	VS1GV520-1B	$4,915
575	25	ZHH525-E	VS1GV525-1B	$6,202
575	30	ZHH530-E	VS1GV530-1B	$7,255
575	40	ZHH540-E	VS1GV540-1B	$9,128
575	50	ZHH550-E	VS1GV550-1B	$10,766
575	60	ZHH560-E	VS1GV560-1B	$11,585
575	75	ZHH575-E	VS1GV575-1B	$13,574
575	100	ZHH5100-E	VS1GV5100-1B	$15,681
575	125	ZHH5125-E	VS1GV5125-1B	$16,617

Vector Drives – 115/230 Volts - Single Phase Washdown Enclosure

Voltage	Heavy Duty HP	Series 18H Catalog Number	VS1GV Catalog Number	VS1GV List Price
115/230	1	—	VS1GV61-1B	$1,655
115/230	2	—	VS1GV62-1B	$1,884
115/230	3	—	VS1GV63-1B	$2,195

Vector Drives – 230 Volts - Three Phase Washdown Enclosure

Voltage	Heavy Duty HP	Series 18H Catalog Number	VS1GV Catalog Number	VS1GV List Price
230	1	—	VS1GV21-4B	$1,504
230	2	—	VS1GV22-4B	$1,713
230	3	—	VS1GV23-4B	$1,996
230	5	—	VS1GV25-4B	$2,309
230	7.5	—	VS1GV27-4B	$2,869

Drives Cross Reference

Vector Drives – 460 Volts - Three Phase Washdown Enclosure

Voltage	Heavy Duty HP	Series 18H Catalog Number	VS1GV Catalog Number	VS1GV List Price
460	1	—	VS1GV41-4B	$1,995
460	2	—	VS1GV42-4B	$2,115
460	3	—	VS1GV43-4B	$2,393
460	5	—	VS1GV45-4B	$2,738
460	7.5	—	VS1GV47-4B	$3,319
460	10	—	VS1GV410-4B	$3,511

Vector Drives – 575 Volts - Three Phase Washdown Enclosure

Voltage	Heavy Duty HP	Series 18H Catalog Number	VS1GV Catalog Number	VS1GV List Price
575	1	—	VS1GV51-4B	$2,194
575	2	—	VS1GV52-4B	$2,326
575	3	—	VS1GV53-4B	$2,632
575	5	—	VS1GV55-4B	$3,012
575	7.5	—	VS1GV57-4B	$3,651
575	10	—	VS1GV510-4B	$3,862

BALDOR

Drives Cross Reference

AC Servo Drives – 230 Volts - Three Phase NEMA 1 Enclosure

Voltage	Constant Torque Amps	Series 23H Catalog Number	VS1SD Catalog Number	VS1SD List Price
230	3.2	SD23H2A03–E	VS1SD2A3-1B	$1,439
230	4.2	SD23H2A04–E	VS1SD2A4-1B	$1,613
230	6.8	SD23H2A07–E	VS1SD2A7-1B	$1,862
230	9.6	SD23H2A10–E	VS1SD2A10-1B	$2,079
230	15.2	SD23H2A16–E	VS1SD2A15-1B	$2,501
230	22.0	SD23H2A22–E	VS1SD2A22-1B	$3,510
230	28.0	SD23H2A28–E	VS1SD2A28-1B	$4,473
230	42.0	SD23H2A42–EO	VS1SD2A42-1B	$5,343
230	54.0	SD23H2A54–ER	VS1SD2A54-1B	$6,403

AC Servo Drives – 460 Volts - Three Phase NEMA 1 Enclosure

Voltage	Constant Torque Amps	Series 23H Catalog Number	VS1SD Catalog Number	VS1SD List Price
460	3.4	SD23H4A04–E	VS1SD4A3-1B	$2,502
460	4.8	SD23H4A05–E	VS1SD4A5-1B	$3,060
460	7.6	SD23H4A08–E	VS1SD4A8-1B	$3,971
460	11.0	SD23H4A11–E	VS1SD4A11-1B	$3,988
460	14.0	SD23H4A15–E	VS1SD4A14-1B	$4,552
460	21.0	SD23H4A21–EO	VS1SD4A21-1B	$4,895
460	27.0	SD23H4A27–ER	VS1SD4A27-1B	$6,237

AC Servo Drives – 230 Volts - Three Phase Washdown Enclosure

Voltage	Constant Torque Amps	Series 23H Catalog Number	VS1SD Catalog Number	VS1SD List Price
230	3.2	—	VS1SD2A3-4B	$1,583
230	4.2	SD23H2A04–W	VS1SD2A4-4B	$1,775
230	6.8	—	VS1SD2A7-4B	$2,049
230	9.6	SD23H2A10–W	VS1SD2A10-4B	$2,287
230	15.2	—	VS1SD2A15-4B	$2,752

AC Servo Drives – 460 Volts - Three Phase Washdown Enclosure

Voltage	Constant Torque Amps	Series 23H Catalog Number	VS1SD Catalog Number	VS1SD List Price
460	3.4	—	VS1SD4A3-4B	$2,753
460	4.8	—	VS1SD4A5-4B	$3,366
460	7.6	—	VS1SD4A8-4B	$4,369
460	11.0	—	VS1SD4A11-4B	$4,387

Drives Cross Reference

AC Servo Drives – 230 Volts - Three Phase NEMA 1 Enclosure

Voltage	Constant Torque Amps	Series H2 Servo Catalog Number	VS1SD Catalog Number	VS1SD List Price
230	3.2	SHH2A03-E	VS1SD2A3-1B	$1,439
230	4.2	SHH2A04-E	VS1SD2A4-1B	$1,613
230	6.8	SHH2A07-E	VS1SD2A7-1B	$1,862
230	9.6	SHH2A10-E	VS1SD2A10-1B	$2,079
230	15.2	SHH2A15-E	VS1SD2A15-1B	$2,501
230	22.0	SHH2A22-E	VS1SD2A22-1B	$3,510
230	28.0	SHH2A28-E	VS1SD2A28-1B	$4,473
230	42.0	SHH2A42-E	VS1SD2A42-1B	$5,343
230	54.0	SHH2A54-E	VS1SD2A54-1B	$6,403

AC Servo Drives – 460 Volts - Three Phase NEMA 1 Enclosure

Voltage	Constant Torque Amps	Series H2 Servo Catalog Number	VS1SD Catalog Number	VS1SD List Price
460	2.1	SHH4A02-E	—	
460	3.4	SHH4A03-E	VS1SD4A3-1B	$2,502
460	4.8	SHH4A05-E	VS1SD4A5-1B	$3,060
460	7.6	SHH4A08-E	VS1SD4A8-1B	$3,971
460	11.0	SHH4A11-E	VS1SD4A11-1B	$3,988
460	14.0	SHH4A14-E	VS1SD4A14-1B	$4,552
460	21.0	SHH4A21-E	VS1SD4A21-1B	$4,895
460	27.0	SHH4A27-E	VS1SD4A27-1B	$6,237

AC Servo Drives – 230 Volts - Three Phase Washdown Enclosure

Voltage	Constant Torque Amps	Series H2 Servo Catalog Number	VS1SD Catalog Number	VS1SD List Price
230	3.2	—	VS1SD2A3-4B	$1,583
230	4.2	—	VS1SD2A4-4B	$1,775
230	6.8	—	VS1SD2A7-4B	$2,049
230	9.6	—	VS1SD2A10-4B	$2,287
230	15.2	—	VS1SD2A15-4B	$2,752

AC Servo Drives – 460 Volts - Three Phase Washdown Enclosure

Voltage	Constant Torque Amps	Series H2 Servo Catalog Number	VS1SD Catalog Number	VS1SD List Price
460	3.4	—	VS1SD4A3-4B	$2,753
460	4.8	—	VS1SD4A5-4B	$3,366
460	7.6	—	VS1SD4A8-4B	$4,369
460	11.0	—	VS1SD4A11-4B	$4,387

BALDOR

Drives Cross Reference

RE Part Number	VS1 Part Number	List Price
SP600		
SP600 230V	**VS1SP 230V**	
6SP201-2P2CTNN	VS1SP21-1B	$999
6SP201-4P2CTNN	VS1SP21-1B	$999
6SP201-6P8CTNN	VS1SP22-1B	$1,138
6SP201-9P6CTNN	VS1SP22-1B	$1,138
6SP201-015CTAN	VS1SP23-1B	$1,330
6SP201-022CTAN	VS1SP25-1B	$1,521
6SP201-028CTAN	VS1SP27-1B (4) / VS1SP210-1B	$1,904
6SP201-042CTAN	VS1SP210-1B	$3,192
6SP201-054CTAN	VS1SP215-1B	$3,192
6SP201-070CTAN	VS1SP220-1B (4) / VS1SP225-1B	$4,255
6SP24X-2P2CTNN	VS1SP21-4B	$1,075
6SP24X-4P2CTNN	VS1SP21-4B	$1,075
6SP24X-6P8CTNN	VS1SP22-4B	$1,223
6SP24X-9P6CTNN	VS1SP22-4B	$1,223
6SP24X-015CTAN	VS1SP23-4B	$1,426
6SP24X-022CTAN	VS1SP25-4B	$1,649
6SP24X-028CTAN	VS1SP27-4B (4)	$2,043
6SP24X-042CTAN	N/A	—
6SP24X-054CTAN	N/A	—
6SP24X-070CTAN	N/A	—
SP600 460V	**VS1SP 460V**	
6SP401-1P1CTNN	VS1SP41-1B	$1,202
6SP401-2P1BTNN	VS1SP41-1B	$1,202
6SP401-3P4CTNN	VS1SP42-1B	$1,457
6SP401-005CTNN	VS1SP42-1B	$1,457
6SP401-008CTNN	VS1SP43-1B	$1,766
6SP401-011CTAN	VS1SP45-1B	$1,915
6SP401-014CTAN	VS1SP47-1B	$2,426
6SP401-022CTAN	VS1SP410-1B (4) / VS1SP215-1B	$2,660
6SP401-027CTAN	VS1SP415-1B	$3,404
6SP401-034CTAN	VS1SP420-1B	$4,043
6SP401-040CTAN	VS1SP425-1B	$5,000
6SP401-052CTAN	VS1SP430-1B	$6,065
6SP401-065CTAN	VS1SP440-1B	$7,447
6SB401-027CTANA	VS1SP415-1B	$3,404
6SB401-034CTANA	VS1SP420-1B	$4,043
6SB401-040CTANA	VS1SP425-1B	$5,000
6SB401-052CTANA	VS1SP430-1B	$6,065
6SB401-065CTANA	VS1SP440-1B	$7,447
6SB401-077CNANA	VS1SP450-1B	$8,936
6SB401-096CNANA	VS1SP460-1B	$9,998
6SB401-125CNANA	VS1SP475-1B	$11,596
6SB401-156CNANA	VS1SP4100-1B	$13,404
6SB401-180CNANA	VS1SP4125-1B	$14,362
6SB401-248CNANA	VS1SP4150-1	$17,250
6SP41F-027BTAN	N/A	—
6SP41F-014BTAN	N/A	—
6SP44X-1P1CTNN	VS1SP41-4B	$1,330
6SP44X-2P1CTNN	VS1SP41-4B	$1,330
6SP44X-3P4CTNN	VS1SP42-4B	$1,511
6SP44X-005CTNN	VS1SP42-4B	$1,511
6SP44X-008CTNN	VS1SP43-4B	$1,840
6SP44X-011CTAN	VS1SP45-4B	$2,106
6SP44X-014CTAN	VS1SP47-4B	$2,766
6SP44X-022CTAN	VS1SP410-4B (4)	$2,926
6SP44X-027CTAN	N/A	—
6SP44X-034CTAN	N/A	—
6SP44X-040CTAN	N/A	—
6SP44X-052CTAN	N/A	—
6SP44X-065CTAN	N/A	—

(4) Frame brake on this model number. **Caution:** horsepower rating same on normal & heavy duty

Drives Cross Reference

RE Part Number	VS1 Part Number	List Price
SP600		
SP600 575V	**VS1SP 575V**	
6SP501-0P9CTNN	VS1SP51-1B	$1,322
6SP501-1P7CTNN	VS1SP51-1B	$1,322
6SP501-2P7CTNN	VS1SP52-1B	$1,603
6SP501-3P9CTNN	VS1SP52-1B	$1,603
6SP501-6P1CTNN	VS1SP53-1B	$1,943
6SP501-9P0CTNN	VS1SP55-1B	$2,106
6SP501-011CTNN	VS1SP57-1B	$2,668
6SP501-017CTNN	VS1SP510-1B (4) /VSTSP515-1B	$2,926
6SP501-022CTNN	VS1SP515-1B	$3,745
6SP501-027CTNN	VS1SP520-1B	$4,447
6SP501-032CTNN	VS1SP525-1B (4) / VSTSP530-1B	$5,500
6SP501-041CTNN	VS1SP530-1B	$6,670
6SP501-052CTNN	VS1SP540-1B	$8,191
6SB501-022CTNNA	VS1SP515-1B	$3,745
6SB501-027CTNNA	VS1SP520-1B	$4,447
6SB501-032CTNNA	VS1SP525-1B (4) / VSTSP530-1B	$5,500
6SB501-041CTNNA	VS1SP530-1B	$6,670
6SB501-052CTNNA	VS1SP540-1B	$8,191
6SB501-062CNNNA	VS1SP550-1B	$9,830
6SB501-077CNNNA	VS1SP560-1B	$11,000
6SB501-099CNNNA	VS1SP575-1B	$12,755
6SB501-125CNNNA	VS1SP5100-1B	$14,745
6SB501-144CNNNA	VS1SP5125-1B	$15,798
6SP54X-0P9CTNN	VS1SP51-4B	$1,463
6SP54X-1P7CTNN	VS1SP51-4B	$1,463
6SP54X-2P7CTNN	VS1SP52-4B	$1,662
6SP54X-3P9CTNN	VS1SP52-4B	$1,662
6SP54X-6P1CTNN	VS1SP53-4B	$2,024
6SP54X-9P0CTNN	VS1SP55-4B	$2,317
6SP54X-011CTNN	VS1SP57-4B	$3,043
6SP54X-017CTNN	VS1SP510-4B (4)	$3,218
6SP54X-022CTNN	N/A	—
6SP54X-027CTNN	N/A	—
6SP54X-032CTNN	N/A	—
6SP54X-041CTNN	N/A	—
6SP54X-052CTNN	N/A	—
GV3000		
GV3000 230V NEMA	**VS1GV 230V**	
1V2160	VS1GV21-1B	$1,405
1V2460	VS1GV21-4B	$1,504
2V2160	VS1GV22-1B	$1,585
2V2460	VS1GV22-4B	$2,115
3V2160	VS1GV23-1B	$2,075
3V2460	VS1GV23-4B	$1,996
5V2160	VS1GV25-1B	$2,043
5V2460	VS1GV25-4B	$2,309
7V2160	VS1GV27-1B	$2,309
7V2260	VS1GV27-4B	$3,319
10V2160	VS1GV210-1B	$3,138
10V2260	Keep – Do not replace	—
15V2160	VS1GV215-1B	$3,836
15V2260	Keep – Do not replace	—
20V2160	VS1GV220-1B	$4,895
20V2260	Keep – Do not replace	—
GV3000 230V P M (IP00)	**VS1GV 230V (NEMA 1)**	
30V2060	VS1GV230-1B	$7,564
40V2060	VS1GV240-1B	$8,723
50V2060	VS1GV250-1B	$11,170
60V2060	VS1GV260-1B	$14,303
75V2060	Keep – Do not replace	—
100V2060	Keep – Do not replace	—

(4) Frame brake on this model number. **Caution:** horsepower rating same on normal & heavy duty

BALDOR

Drives Cross Reference

RE Part Number	VS1 Part Number	List Price
GV3000		
GV3000 460V NEMA	**VS1GV 460V**	
1V4160	VS1GV41-1B	$1,915
1V4460	VS1GV41-4B	$1,995
2V4160	VS1GV42-1B	$1,989
2V4460	VS1GV42-4B	$2,115
3V4160	VS1GV43-1B	$2,075
3V4460	VS1GV43-4B	$2,393
5V4160	VS1GV45-1B	$2,340
5V4460	VS1GV45-4B	$2,738
7V4160	VS1GV47-1B	$2,690
7V4260	VS1GV47-4B	$3,319
10V4160	VS1GV410-1B	$3,055
10V4260	VS1SP410-4B	$3,511
15V4160	VS1GV415-1B	$3,830
15V4260	Keep -- Do not replace	—
20V4260	Keep -- Do not replace	—
20V4160	VS1GV420-1B	$4,469
25G4160	VS1GV420-1B	$4,469
25G4260	Keep -- Do not replace	—
25V4160	VS1GV425-1B	$5,638
25V4260	Keep -- Do not replace	—
30V4160	VS1GV430-1B	$6,596
30V4260	Keep -- Do not replace	—
40V4160	VS1GV440-1B	$10,532
40V4260	Keep -- Do not replace	—
50V4160	VS1GV450-1B	$9,787
50V4260	Keep -- Do not replace	—
60G4160	VS1GV450-1B	$9,787
60G4260	Keep -- Do not replace	—
200V4160	VS1GV4200-1T	$24,200
200V4160DS	Keep -- Do not replace	—
250V4160	VS1GV4250-1T	$30,250
250V4160DS	Keep -- Do not replace	—
300V4160	Keep -- Do not replace	—
300V4160DS	Keep -- Do not replace	—
350V4160	Keep -- Do not replace	—
350V4160DS	Keep -- Do not replace	—
400V4160	Keep -- Do not replace	—
450V4160DS	Keep -- Do not replace	—
GV3000 460V P M (IP00)	**VS1GV 460V (NEMA 1)**	
30V4060	VS1GV430-1B	$6,596
40V4060	VS1GV440-1B	$8,298
50V4060	VS1GV450-1B	$9,787
60V4060	VS1GV460-1B	$10,532
75V4060	VS1GV475-1B	$12,340
100V4060	VS1GV4100-1B	$14,255
125V4060	VS1GV4125-1B	$15,106
150V4060	VS1GV4150-1T	$18,150
200V4060	VS1GV4200-1T	$24,200
10V2160	VS1GV210-1B	$3,138
10V2260	Keep – Do not replace	—
15V2160	VS1GV215-1B	$3,836
15V2260	Keep – Do not replace	
20V2160	VS1GV220-1B	$4,895
20V2260	Keep – Do not replace	—
GV3000 230V P M (IP00)	**VS1GV 230V (NEMA 1)**	
30V2060	VS1GV230-1B	$7,564
40V2060	VS1GV240-1B	$8,723
50V2060	VS1GV250-1B	$11,170
60V2060	VS1GV260-1B	$14,303
75V2060	Keep – Do not replace	—
100V2060	Keep – Do not replace	—

Drives Cross Reference

RE Part Number	VS1 Part Number	List Price
GV3000		
GV3000 460V Bookshelf (5)	**VS1GV 460V (NEMA 1)**	
31ER4060	VS1GV41-1B	$1,915
31ET4060 (CE Filter)	Keep -- Do not replace	—
38ER4060	VS1GV42-1B	$1,989
38ET4060 (CE Filter)	Keep -- Do not replace	—
55ER4060	VS1GV43-1B	$2,075
55ET4060 (CE Filter)	Keep -- Do not replace	—
85ER4060	VS1GV45-1B	$2,340
85ET4060 (CE Filter)	Keep -- Do not replace	—
126ER4060	VS1GV47-1B	$2,690
126ET4060 (CE Filter)	Keep -- Do not replace	—
150ER4060	VS1GV410-1B (4)	$3,055
150ET4060 (CE Filter)	Keep -- Do not replace	—
240ER4060	VS1GV415-1B	$3,830
240ET4060 (CE Filter)	Keep -- Do not replace	—
300ER4060	VS1GV420-1B	$4,469
300ET4060 (CE Filter)	Keep -- Do not replace	—
430ER4060	VS1GV425-1B	$5,638
430ET4060 (CE Filter)	Keep -- Do not replace	—
GV3000 460V RED	**VS1GV**	
50R4160	VS1GV460-1B	$10,532
50T4160 (CE Filter)	Keep -- Do not replace	—
75R4160	VS1GV475-1B	$12,340
75T4160 (CE Filter)	Keep -- Do not replace	—
125R4160	VS1GV4125-1B (6)	$15,106

(4) Frame brake on this model number. **Caution:** horsepower rating same on normal & heavy duty

(5) Bookshelf dimensions are normally narrow and larger in depth than the standard NEMA 1 design replacement

(6) Verify amp requirements if V/Hz application. May need to offer the VS1GV4150-1T

BALDOR

Drives Cross Reference

RE Part Number	VS1 Part Number	List Price
GV6000	**VS1GV**	
GV6000 230V	**VS1GV 230V**	
6V21-2P2TA	VS1GV21-1B	$1,405
6V21-4P2TA	VS1GV21-1B	$1,405
6V21-6P8TA	VS1GV21-1B	$1,405
6V21-9P6TA	VS1GV22-1B	$1,585
6V21-015TA	VS1GV23-1B	$1,766
6V21-022TA	VS1GV25-1B	$2,043
6V21-028TA	VS1GV27-1B (4) / VS1GV210-1B	$2,309
6V21-042TA	VS1GV210-1B	$3,138
6V21-052TA	VS1GV215-1B	$3,836
6V21-070TA	VS1GV220-1B (4) / VS1GV225-1B	$4,895
6V21-080TA	VS1GV225-1B	$5,745
6V21-104TA	VS1GV230-1B	$7,564
6V21-130NA	VS1GV240-1B (4) / VS1GV250-1B	$8,723
6V21-154NA	VS1GV250-1B	$11,170
6V21-192NA	VS1GV260-1B (4)	$14,303
6V21-260NA	**Future GV**	
GV6000 460V	VS1GV 460V	—
6V41-1P1TA	VS1GV41-1B	$1,915
6V41-2P1TA	VS1GV41-1B	$1,915
6V41-3P4TA	VS1GV41-1B	$1,915
6V41-5P0TA	VS1GV42-1B	$1,989
6V41-8P0TA	VS1GV43-1B	$2,075
6V41-011TA	VS1GV45-1B	$2,340
6V41-014TA	VS1GV47-1B	$2,690
6V41-022TA	VS1GV410-1B (4) / VS1GV415-1B	$3,055
6V41-027TA	VS1GV415-1B	$3,830
6V41-034TA	VS1GV420-1B	$4,469
6V41-040TA	VS1GV425-1B	$5,638
6V41-052TA	VS1GV430-1B	$6,596
6V41-065TA	VS1GV440-1B	$8,298
6V41-077TA	VS1GV450-1B	$9,787
6V41-096NA	VS1GV460-1B	$10,532
6V41-125NA	VS1GV475-1B	$12,340
6V41-156NA	VS1GV4100-1B	$14,255
6V41-180NA	VS1GV4125-1B	$15,106
6V41-248NA	VS1GV4150-1T	$18,150
GV6000 575V	**VS1GV 575V**	
6V51-1P7TA	VS1GV51-1B	$2,106
6V51-2P7TA	VS1GV51-1B	$2,106
6V51-3P9TA	VS1GV52-1B	$2,188
6V51-6P1TA	VS1GV53-1B	$2,282
6V51-9P0TA	VS1GV55-1B	$2,574
6V51-011TA	VS1GV57-1B	$2,959
6V51-017TA	VS1GV510-1B (4) / VS1GV515-1B	$3,361
6V51-022TA	VS1GV515-1B	$4,213
6V51-027TA	VS1GV520-1B	$4,915
6V51-032TA	VS1GV525-1B (4) / VS1GV530-1B	$6,202
6V51-041TA	VS1GV530-1B	$7,255
6V51-052TA	VS1GV540-1B	$9,128
6V51-062TA	VS1GV550-1B	$10,766
6V51-077NA	VS1GV560-1B	$11,585
6V51-099NA	VS1GV575-1B	$13,574
6V51-125NA	VS1GV5100-1B	$15,681
6V51-144NA	VS1GV5125-1B	$16,617

(4) Frame brake on this model number. **Caution:** horsepower rating same on normal & heavy duty

Drives Cross Reference

RE Part Number	VS1 Part Number	List Price
GP2000	**VS1SP**	
GP2000 230V	**VS1SP 230V**	
2GU21001	VS1SP21-1B	$1,000.00
2GU21002	VS1SP22-1B	$1,138.00
2GU21003	VS1SP23-1B	$1,330.00
2GU21005	VS1SP25-1B	$1,521.00
2GU21007	VS1SP27-1B	$1,904.00
2GU21010	VS1SP210-1B	$2,681.00
2GU21015	VS1SP215-1B	$3,192.00
2GU21020	VS1SP220-1B	$4,255.00
2GU21025	VS1SP225-1B	$5,106.00
2GU21030	VS1SP230-1B	$6,596.00
2GU21040	VS1SP240-1B	$7,872.00
2GU21050	VS1SP250-1B	$9,998.00
GP2000 460V	**VS1SP 460V**	
2GU41001	VS1SP41-1B	$1,202.00
2GU41002	VS1SP42-1B	$1,457.00
2GU41003	VS1SP43-1B	$1,766.00
2GU41005	VS1SP45-1B	$1,915.00
2GU41007	VS1SP47-1B	$2,426.00
2GU41010	VS1SP410-1B	$2,660.00
2GU41015	VS1SP415-1B	$3,404.00
2GU41020	VS1SP420-1B	$4,043.00
2GU41025	VS1SP425-1B	$5,000.00
2GU41030	VS1SP430-1B	$6,065.00
2GU41040	VS1SP440-1B	$7,447.00
2GU41050	VS1SP450-1B	$8,936.00
2GU41060	VS1SP460-1B	$9,998.00
2GU41075	VS1SP475-1B	$11,596.00
2GU41100	VS1SP4100-1B	$13,404.00
2VU41125	VS1SP4125-1B	$14,362.00
GP2000 575V	**VS1SP 575V**	
2GU51005	VS1SP55-1B	$2,106.00
2GU51010	VS1SP510-1B	$2,926.00
2GU51020	VS1SP520-1B	$4,447.00
2GU51030	VS1SP530-1B	$6,670.00
2GU51040	VS1SP540-1B	$8,191.00
2GU51050	VS1SP550-1B	$9,830.00
2GU51060	VS1SP560-1B	$11,000.00
2GU51075	VS1SP575-1B	$12,755.00
2GU51100	VS1SP5100-1B	$14,745.00
2GU51125	VS1SP5125-1B	$15,798.00

BALDOR

Single Phase DC Cross Reference

Reliance Electric DC2 to Baldor BC Series

New BC Series Catalog Numbers Introduced for Functional Replacement of Most Popular DC2 Models

DC2 M/N	Comments/Description	BC Series Alternate M/N	Comments/Description	BC Basic Drive List	BC Series Options Required for Functional Equivalence	Drive w/Options List
DC2-40U	DC2-40 series are unique "OPEN CHASSIS" not NEMA rated, designed for mounting within a cabinet or enclosure. Models are "enclosed" in an aluminum extrusion heatsink back and sides with a sheet metal cover, no top or bottom. Requires remote operator controls. DC2-42U-Instrument Interface Model, (Resistive isolation analog speed ref. input, with AUX relay)	BC142-5	Basic Plate, (Chassis), style	$200.00	BC143 - $63	$263.00
DC2-42U		BC142-6-SIH	Basic Plate, (Chassis), style with heatsink and signal isolation board.	$445.00	Heatsink, BC143, and Input Signal Isolation Option Board, BC152, Factory Installed. AUX relay for user use not available.	$579.00
DC2-43U		BC204	The DC2-43U is a Torque Control drive. No BC Series direct replacement. Model BC204 is a Plate, (Chassis) Style REGENERATIVE drive with Torque Control capability jumper selectable.	$336.00	BC143 - $63	$399.00
DC2-50U*	Basic Plate style	BC142-6**	Basic Plate, (Chassis), style	$199.00	N/A	$199.00
DC2-52U*	Instrument Interface Model, (Resistive isolation analog speed ref. input, with AUX relay)	BC142-6**	Input Isolation Option Board Required. AUX relay for user use not available.	$199.00	BC152-$172	$371.00
DC2-54U*	Torque Regulator		No direct replacement model number			
DC2-70U	Basic w/NEMA 12 enclosure	BC154 ‡	Basic w/NEMA 4X enclosure	$416.00	N/A	$416.00
DC2-71U	NEMA 12 w/Reversing	BC154 ‡	NEMA 4X w/Reversing option	$416.00	BC156-$128	$544.00
		BC154-R ‡		**BC154 w/BC156, Mechanical FWD-DB-REV Switch factory installed**		**$550.00**
DC2-72U	NEMA 12 w/Instrument Interface, (Resistive isolation analog speed ref. input, with AUX relay)	BC154 ‡	NEMA 4X w/Signal Isolation and Auto/Man Switch options.	$416.00	BC145-$187 BC158-$53	$656.00
		BC154-SI ‡		**BC154 w/BC145, Signal Isolator and BC158, Auto/Manual Switch factory installed**		**$670.00**
DC2-74U	NEMA 12 Torque Regulator w/Instrument Interface, (Resistive isolation analog speed ref. input, with AUX relay)	BC154 ‡	NEMA 4X w/Signal Isolation Option. Torque control jumper selectable.	$416.00	BC145-$187 BC158-$53	$656.00
		BC154-SI ‡		**BC154 w/BC145, Signal Isolator and BC158, Auto/Manual Switch factory installed**		**$670.00**
DC2-80U	NEMA 4/4X/12 Enclosure w/o operator controls	N/A	No direct replacement model number			
DC2-82U	NEMA 4/4X/12 Enclosure W/Instrument Interface. w/o operator controls	N/A	No direct replacement model number			
DC2-90U	NEMA 4/4X/12 Enclosure w/operator controls	BC154 ‡	NEMA 4X	$416.00	N/A	$416.00
DC2-91U	NEMA 4/4X/12 Enclosure w/operator controls, Reversing	BC154 ‡	NEMA 4X w/Reversing option	$416.00	BC156-$128	$544.00
		BC154-R ‡		**BC154 w/BC156, Mechanical FWD-DB-REV Switch factory installed**		**$550.00**
DC2-92U	NEMA 4/4X/12 Enclosure w/operator controls & Instrument Interface, (Resistive isolation analog speed ref. input, with AUX relay)	BC154 ‡	NEMA 4X w/Isolation Signal Board option.	$416.00	BC145-$187 BC158-$53	$656.00
		BC154-SI ‡		**BC154 w/BC145, Signal Isolator and BC158, Auto/Manual Switch factory installed**		**$670.00**
DC2-98U	NEMA 4/4X/12 Enclosure w/operator controls, Reversing, and Run/Jog	BC154 ‡	NEMA 4X w/Reversing and Run/Jog option	$416.00	BC156-$128 BC157-$23	$567.00
DC2-99U	NEMA 4/4X/12 Enclosure w/operator controls and Run/Jog	BC154 ‡	NEMA 4X w/ Run/Jog option	$416.00	BC157-$23	$439.00
F1DC2000	Fuse Kit	N/A	Line fuse and Armature fuse included			
F2DC2000	Fuse Kit	N/A	Line fuse and Armature fuse included			
*HS1-50	Heatsink (Required for the 50 Series full output rating)	**BC143	Heatsink option for BC140 series (Required for full output rating)	$63.00		$63.00

‡ BC154 has RUN/FAULT relay standard.
Single *, and double ** refer to the optional heatsinks shown on the last row of the above chart.

Single Phase DC Cross Reference

Reliance Electric DC3 to Baldor BC Series

New BC Series Catalog Numbers Introduced for Functional Replacement of Most Popular DC3 Models

DC3 M/N	Description	BC Series Alternate M/N	Comments	BC Basic Drive List	BC Series Options Required for Functional Equivalence	Drive w/Options List
DC3N-12D-00-010-AN	Non Isolated, Plate Style, Heatsink, DC3N-HS-00 required for full output rating	**BC142-5**	**New Model, Non Isolated, Plate Style w/o fuses or fuse holders**	$200.00	Heatsink BC143-$63	$263.00
DC3N-12D-01-010-AN	Non Isolated, Enclosed, NEMA 1, Heatsink, DC3N-HS-01 required for full output rating	BC140	Non Isolated, Enclosed, NEMA 1, Heatsink, BC143 required for full output rating	$329.00	Heatsink BC143-$63	$392.00
DC3N-12D-4X-010-AN	Non Isolated, Enclosed, NEMA 4X/12	**BC154**	Non Isolated, Enclosed, NEMA 4X	$416.00	NA	$416.00
		BC154-P	**Non Isolated, Enclosed, NEMA 4X w/Power On/Off switch instead of START/STOP switch factory installed**	$416.00	NA	$416.00
DC3N-12D-00-010-AI	Isolated Plate style	**BC141-SIH, (115V)**	**New Model Plate style, Isolated, with BC152 Signal Isolator option and Heatsink, BC143 for full output rating (230V, 3HP) factory installed**		**Signal Isolator, BC152-$171 Heatsink, BC143-$63**	$425.00
		BC142-SIH, (230V)			**Signal Isolator, BC152-$171 Heatsink, BC143-$63**	$445.00
DC3N-12D-4X-010-AI	Isolated, Enclosed, NEMA 4X/12	BC154	Non-Isolated, Enclosed, NEMA 4X	$416.00	Signal Isolator BC145 -$187 Auto/Manual Switch BC158-$50	$653.00
		BC154-SI	**New Model BC 154 with BC145 Signal Isolator, $187, and BC 158 Auto/Manual Switch, $53, Factory Installed**			$670.00
Regen						
DC3R-12D-00-010-AN	Non Isolated, Plate Style, Heatsink, DC3R-HS-00 required for full output rating	BC204	Non Isolated, Plate Style, Heatsink, BC143 required for full output rating	$336.00	Heatsink BC143-$63	$399.00
DC3R-12D-00-010-AI	Isolated, Plate Style, Heatsink, DC3R-HS-00 required for full output rating	BC204	Non Isolated, Plate Style, Heatsink, BC143 required for full output rating	$336.00	Heatsink BC143-$63 Bi-Polar Signal Isolator BC215-$88	$487.00
		BC204-BPSI	**BC204 with BC215 Bi-Polar Signal Isolator factory installed (Heatsink extra)**			$434.00
DC3R-12D-4X-010-AN	Non Isolated, Enclosed NEMA 4X/12	BC254	Non Isolated Enclosed NEMA 4X	$600.00	Fwd-Brk-Rev Switch BC253-$22	$622.00
		BC254-FBR	**BC254 with BC253 FWD-STOP/BRAKE-REV switch factory installed**			$630.00
DC3R-12D-4X-010-DN	Non Isolated, Enclosed, Digital Panel, NEMA 4X/12	N/A	No direct replacement model number	N/A		

Options

DC3 Option Model Number		BC Series Option Catalog Number		BC Basic Drive List		List
DC3N-HS-00	Heatsink	BC143	Heatsink	$63.00		$63.00
DC3N-HS-01	Heatsink	BC145	Signal Isolator board	$187.00		$187.00
DC3R-HS-00	Heatsink	BC152	Barrier Term. w/Sig. Iso.	$171.00		$171.00
		BC158	Auto/Man Sw. Kit	$53.00		$53.00
		BC215	Bipolar Signal Isolator Bd.	$88.00		$88.00
		BC253	FWD-STOP-BRK-REV switch for BC254	$22.00		$22.00

BALDOR

Single Phase DC Cross Reference

Reliance Electric MinPak Plus to Baldor BC Series

MinPak Plus Model Number	Comments/Description	BC Series M/N (See Note)	Comments/Description	Basic Drive List	BC Series Options Required for Functional Equivalence	Drive w/Options List
Non-Regen						
14C10	Enclosed - 115 Vac 1/4 - 3/4 Hp	BC140	Enclosed, NEMA 1 1/100 - 1 Hp @115 Vac input 2 Hp @230 Vac input	$329.00	BC143 Heatsink - $63	$392.00
		BC154	Enclosed, NEMA 4X 1/4 - 1 Hp @115 Vac input 2 Hp @230 Vac input	$416.00	N/A	$416.00
14C11	Enclosed - 230 Vac 1/2 - 1.5 Hp	BC140	Enclosed, NEMA 1 1/100 - 1 Hp @115 Vac input 2 Hp @230 Vac input	$329.00	BC143 Heatsink - $63	$392.00
		BC154	Enclosed, NEMA 4X 1/4 - 1 Hp @115 Vac input 2 Hp @230 Vac input	$416.00	N/A	$416.00
14C12	Enclosed - 230 Vac 2 - 3 Hp	BC140	Enclosed, NEMA 1 1/100 - 1 Hp @115 Vac input 2 Hp @230 Vac input	$329.00	BC143 Heatsink - $63	$392.00
		BC154	Enclosed, NEMA 4X 1/4 - 1 Hp @115 Vac input 2 Hp @230 Vac input	$416.00	N/A	$416.00
		BC160	Enclosed, NEMA 4X 3 Hp @230 Vac input	$479.00	N/A	$479.00
14C13	Enclosed - 230 Vac 5 Hp	N/A	N/A	N/A	N/A	N/A
Regen						
14C30	Enclosed - 115 Vac 1/4 - 3/4 Hp	BC254	Enclosed, NEMA 4X 1/8 - 1 Hp @115 Vac input 2 Hp @230 Vac input	$599.00	N/A	$600.00
14C31	Enclosed - 230 Vac 1/2 - 1.5 Hp	BC254	Enclosed, NEMA 4X 1/8 - 1 Hp @115 Vac input 2 Hp @230 Vac input	$599.00	N/A	$600.00
14C32	Enclosed - 230 Vac 2 - 3 Hp	BC254 2 Hp Rating Only	Enclosed, NEMA 4X 1/8 - 1 Hp @115 Vac input 2 Hp @230 Vac input	$599.00	N/A	$600.00
14C33	Enclosed - 230 Vac 5 Hp	No Equivalent BC Series	N/A	N/A	N/A	N/A
Non-Regen						
14C20	* Chassis - 115 Vac 1/4 - 3/4 Hp	BC141	Chassis, (Plate Style) 115 Vac 1/100 - 1.5 Hp	$180.00	BC143 Heatsink - $63	$243.00
14C21	* Chassis - 230 Vac 1/2 - 1.5 Hp	BC142	Chassis, (Plate Style) 230 Vac 1/100 - 3 Hp	$180.00	BC143 Heatsink - $63	$243.00
14C22	* Chassis - 230 Vac 2 - 3 Hp	BC142-6	Chassis, (Plate Style) 1/100 - 1.5 Hp @ 115 Vac input 1/50 - 3 Hp @ 230 Vac input	$198.00	BC143 Heatsink - $63	$261.00
14C23	* Chassis - 230 Vac 5 Hp	BC155	Chassis, (Plate Style) 5 Hp @ 230 Vac	$588.00	N/A	$588.00
Regen						
14C40	* Chassis - 115 Vac 1/4 - 3/4 Hp	BC204	"Chassis, (Plate Style) 1/8 - 1 Hp @ 115 Vac 2 Hp @ 230 Vac input	$336.00	BC143 Heatsink - $63	$399.00
14C41	* Chassis - 230 Vac 1/2 - 1.5 Hp	BC204	Chassis, (Plate Style) 1/8 - 1 Hp @ 115 Vac 2 Hp @ 230 Vac input	$336.00	BC143 Heatsink - $63	$399.00
14C42	* Chassis - 230 Vac 2 - 3 Hp	BC201	"Chassis, (Plate Style) 1/4 - 1.5 Hp @ 115 Vac 3 Hp @ 230 Vac input	$746.00	N/A	$746.00
14C43	* Chassis - 230 Vac 5 Hp	BC203	Chassis, (Plate Style) 5 Hp @ 230 Vac input"	$939.00	N/A	$939.00

Note: Enclosed MinPak Plus drives are standard NEMA 4/12. Certain BC Series cross referenced enclosed models are NEMA 1.
Also, the application must be considered where these drives are used, as there are options for MinPak Plus that do not have equivalent BC Series options. (Example: Dancer Follower Kit, 14C230)
* Chassis models are discontinued. Specify enclosed model and a remote adapter kit, Model 14C220,($75 List), and remove enclosure cover to convert to chassis drive

Glossary of Terms

AC (Alternating Current) – The commonly available electric power supplied by an AC generator and is distributed in single- or three-phase forms. AC current changes its flow (current).

AC Motor – A motor operating on AC current that flows in either direction. There are two types: induction and synchronous.

Accelerating Torque – An increase in torque (force) generated by a motor in order to achieve running speed.

Adjustable Speed – The concept of varying the speed of a motor, either manually or automatically. The desired operating speed (set speed) is relatively constant regardless of load.

Adjustable Speed Drive (Electrical) – The adjustable speed drive is comprised of the motor, drive controller, and operator's controls (either manual or automatic). See also Inverter.

Altitude – The atmospheric altitude (height above sea level) at which the motor or drive will be operating.

Ambient Temperature – The temperature of the surrounding cooling medium, such as gas or liquid, which comes into contact with the heated parts of the motor or drive.

Ampere – The rate of flow of charge in a conductor of one coulomb per second.

Armature – The moving part of a magnetic circuit, such as the rotating part of a motor or generator.

Base Frequency – The motor nameplate frequency rating.

Base Speed – The manufacturer's nameplate rating at which point the motor will develop rated horsepower at rated load and voltage. With DC drives, it is commonly the point where full armature voltage is applied with full-rated field excitation. With AC drives, it is commonly the point where 60 Hz is applied to the induction motor.

BAUD – A unit of signaling speed, equal to the number of discrete conditions or signal events per second. Where one bit is encoded on each signaling event, the number of baud is the same as the number of bits.

Braking – A method of stopping or reducing the time required to stop an AC or DC motor, accomplished in several ways:

DC-injection braking (AC drives) – A method which produces electromagnetic braking forces in the motor by removing two AC motors (stator) phases and injecting DC current. The result is a linear braking characteristic (ramp) that does not diminish with motor speed. Application is normally limited to 10 - 20% of rated motor speed due to increased heating in the rotor.

Dynamic Braking (AC drives) - DB – A method which produces electromagnetic braking forces in the motor by dissipating generated power into the DC bus through a resistive load. Braking force remains constant and is only limited by the thermal capacity of the resistors. The result is a linear braking characteristic (ramp) that does not diminish with motor speed.

Dynamic Braking (DC drives) - DB – A method which produces electromagnetic braking forces in the motor by dissipating generated power from armature / shunt field reaction into a resistive load. Braking force is determined by the field strength, armature voltage, and thermal capacity of the resistors. The result is a logarithmic braking characteristic (curve) that diminishes with motor speed.

Regenerative Braking – The technique of slowing or stopping a drive by regeneration.

Braking Torque – The torque required to bring a motor down to a standstill. The term is also used to describe the torque developed by a motor during dynamic braking conditions.

Breakaway Torque – The torque required to start a machine from standstill. It is always greater than the torque needed to maintain motion.

Cascade Drive System – Two or more drives connected to a master speed setting potentiometer.

Capacitor – A device which, when connected in an alternating-current circuit, causes the current to lead the voltage in time phase. The peak of the current wave is reached ahead of the peak of the voltage wave.

CE – This designation shows that a product such as a drive or motor meets European Standards for safety and environmental protection. A CE mark is required for products used in most European countries.

Chassis – A hardware assembly that houses devices such as I/O modules, adapter modules, processor modules, and power supplies.

Configurable – Input parameter whose values can only be modified while the drive is stopped (not running or jogging).

ControlNet – An open producer/consumer communication network with features such as redundant media and deterministic I/O timing, designed for high-performance or time-critical requirements.

Current – The time rate of flow of electrical charge. Current is measured in amps (amperes).

Current Feedback – A current signal used by the regulator to control the operating current of the drive.

BALDOR

Glossary of Terms

Custom View – A collection of parameters that you select. Parameters from different products and modules can be included in the same custom view so that you can monitor them on the same screen (using VS Utilities software). A custom view can be saved and opened at a later time.

DC (Direct Current) – A current that flows only in one direction in an electric circuit. It may be continuous or discontinuous and it may be constant or varying.

DC Bus – A drive's power structure that transmits rectified AC line power from the bridge rectifier to the output transistors.

DC Motor – A motor using either generated or rectified DC power. A DC motor is usually used when variable speed operation is required.

Decelerating Torque – The torque (force) generated by the decrease in motor and load kinetic energy which the motor and load requires to reach is final (slower) speed condition.

Default Value – Parameter values that are stored in the drive's read-only memory (ROM).

Device – A module or product.

DeviceNet – A producer/consumer Control Area Network (CAN) that connects controllers and devices such as drives.

Diode – A solid-state, unidirectional conductor.

DPI – A peripheral communication interface used by various Baldor VS Drives and power products.

Drive Controller – An electronic device that can control the speed, torque horsepower, and direction of an AC or DC motor. Also called Variable Speed Drive.

Dynamic Braking – See Braking.

Efficiency – The ratio of mechanical output to electrical input. It represents the effectiveness with which the motor converts electrical energy to mechanical energy.

EIA – Electronics Industries Association. An American agency that sets electrical / electronic standards.

Electrostatic Discharge (ESD) – A static-electricity discharge that may damage drive components. Follow appropriate precautions to guard against damage to drive components.

EMF – Electromotive Force, another term for voltage or potential difference. In DC adjustable speed drives, voltage applied to the motor armature from a power supply is the emf and the voltage generated by the motor is the counter-emf or cemf.

EMI – Electromagnetic Interference. Any electromagnetic disturbance that interrupts, obstructs, or otherwise impairs the performance of electronic equipment.

Enclosure – The housing or frame of the drive.

Ethernet/IP – An open producer-consumer communication network based on the Ethernet standard (IEEE 802.3), TCP/IP, UDP/IP, and CIP.

Fault – Any malfunction that interferes with normal system operation.

Field – A term commonly used to describe the stationary (stator) member of a DC motor. The field provides the magnetic field with which the mechanically rotating (armature or rotor) member interacts.

Firmware – Logic stored in read-only memory.

Flash Update – The process of updating firmware in a device.

Flux – The magnetic field which is established around an energized conductor or permanent magnet. The field is represented by flux lines creating a flux pattern between opposite poles. The density of the flux lines is a measure of the strength of the magnetic field.

Force – The tendency to change the motion of an object with an exertion of energy from a separate source. Force is measured in pound-feet, ounce-inches, Newton-meters, or gram-centimeters.

Frame – The supporting structure of the drive. The frame also determines mounting dimensions.

Frequency – The rate at which alternating current makes a complete cycle of reversals. It is expressed in cycles per second. In the U.S., 60 cycles (Hz) is the standard while in other countries 50 Hz (cycles) is common. The frequency of the AC current will affect the speed of a motor.

Frequency Setpoint – The frequency value stored in memory (either by local or remote means) within a given frequency range of the drive's output voltage. This sets the speed of the motor.

Gain – The ratio of the magnitude of the output signal with respect to that of the input signal.

GND Sense – A current transducer that detects an unequal or imbalanced current in the three-phase AC line or DC bus of the drive. The imbalance indicates an output ground fault condition.

Hertz (Hz) – One cycle per second (as in 60 Hz which is 60 cycles per second).

Horsepower – The measure of the rate of work. One horsepower is equivalent to lifting 33,000 pounds to a height of one foot in one minute. The horsepower (HP) of a motor is expressed as a function of torque (T, measured in lb-ft) and RPM (revolutions per minute). For motors, you can approximate horsepower using this formula: HP = T x (RPM/5250).

Glossary of Terms

Host – 1. A central controlling computer in a network system.
2. Any device on a network system that provides a controlling function to another device on the network.
3. Any intelligent device for which another device is providing a communication interface to a network.

Host Interface – The communication interface to the host computer.

Identification Protocol (IDP) – An extended application layer protocol used by Baldor intelligent sensing devices to communicate with other devices and host processors. IDP commands and responses are inserted as data within the PCCC layer.

Inductance – The characteristic of an electric circuit by which varying current in it produces a varying magnetic field which causes voltages in the same circuit or in a nearby circuit.

Inertia – A measure of a body's resistance to changes in velocity, whether the body is at rest or moving at a constant velocity. The velocity can be either linear or rotational.

Inertial Load – A load (such as a flywheel or fan) that tends to cause the motor shaft to continue to rotate after power has been removed (stored kinetic energy). If this continued rotation cannot be tolerated, some mechanical or electrical braking means must be applied. This application might require a special motor due to the energy required to accelerate the inertia.

Ingress Protection (IP) Rating – The IP designation is a numeric rating used to specify the degree of environmental protection provided by an enclosure based on specific tests. The IP rating consists of two numbers, although a third number describing the degree of protection from mechanical impact can also be included but is commonly omitted. For example, IP 56. A higher number represents better protection.

First Number – The first number describes the degree of protection from solid objects and with respect to human access to hazardous parts.

0 - No protection.
1 - Protection against solid objects 50 mm in diameter or greater
2 - Protection against solid objects 12.5 mm in diameter or greater
3 - Protection against solid objects 2.5 mm in diameter or greater
4 - Protection against solid objects 1.0 mm in diameter or greater
5 - Dust protected (quantities of dust will not accumulate)
- Dust tight

Second Number – The second number describes the degree of protection from liquids.

0 - No protection.
1 - Protection against vertically falling drops of water
2 - Protection against vertically falling drops of water when enclosure is tilted up to 15 degrees
3 - Protection against spraying water when the enclosure is tilted up to 60 degrees on the vertical
4 - Protection against splashing water from all directions
5 - Protection against water jets from all directions
6 - Protection against powerful water jets or heavy seas
7 - Protection against the effects of temporary immersion in water
8 - Protection against the effects of continuous submersion in water

Instantaneous Electronic Trip (IET) – A fault condition that occurs while the drive is running resulting in a motor coast-to-rest stop. The drive senses a condition that could result in equipment damage.

Input Parameter – A parameter whose value can be changed through the OIM.

Input Power Factor – The ratio of the input inverter AC effective power to the input AC apparent power.

Inverter – 1. An AC adjustable-frequency drive
2. A particular section of an AC drive. This section uses the DC voltage from a previous circuit stage (intermediate DC circuit) to produce a pulse-width modulated or stepped AC current or voltage waveform that has characteristics similar to the desired sine-wave frequency.
3. A circuit whose output signal is the inverse of its input.

I/O – Input(s) and/or Output(s)

I/O Block – An assembly containing a chassis, a power supply, an adapter, and I/O in a single integral package.

I/O Channel – A channel of a data transmission link between a processor scanner module and an I/O adapter module.

I/O Chassis – A chassis for I/O modules and either a processor to control the I/O modules, or an adapter to interface a scanner to the I/O modules.

IR Compensation – A way to compensate for the voltage drop across resistance of the AC or DC motor circuit and the resultant reduction in speed. This compensation also provides a way to improve the speed regulation characteristics of the motor, especially at low speeds. Drives that use a tachometer generator for speed feedback generally do not require an IR compensation circuit because the tachometer will inherently compensate for the loss in speed.

Jogging – 1. In a numerical control system, an operator manually generating motion (continuous or incrementally) by closing a switch.
2. An operator generating motion incrementally by closing a switch.

Joule – 1. The work done by the force of 1 Newton acting through a distance of 1 meter.
2. The energy required to transport 1 coulomb between two points having a potential difference of 1 volt.

BALDOR

Glossary of Terms

k – An abbreviation used as a multiple for bits, bytes, or words denoting size of a block of data or memory. 1 k = 1024.

Kilowatt (kW) – Equals 1,000 watts and is used where larger units of power measurement are desired because the watt is a relatively small unit of power.

Kinetic Energy – The energy of motion of a moving body.

Ladder Diagram – An industry standard for representing relay control logic.

LED – Light Emitting Diode.

LEM – A hall-effect current transducer that senses drive output current and generates a signal for the control logic.

Line Dip – A short duration, low input voltage condition.

Liquid Crystal Display (LCD) – A reflective, visual readout device often used in digital watches and laptop computers.

Load – The burden imposed on a motor by the driven machine. It is often stated as the torque required to overcome the resistance of the machine it drives. "Load" is sometimes synonymous with "required power."

Load Torque – The motor torque required to keep the load rotating at nearly constant speed.

Local I/O – I/O connected to a processor across a backplane or a parallel link, thus limiting its distance from the processor.

Logic Diagram – A diagram that represents logic elements and their interconnections.

Master – A device used to control secondary devices.

Modulated LED Control – A photoelectric control that operates on light pulses, rather than on constant light intensity.

Module – A device that provides and interface between a product and a network. It is often referred to as a peripheral.

Module Addressing – The method of identifying the I/O modules installed in chassis.

Motor – A device that converts electrical energy to mechanical energy to turn a shaft.

Motor Identification:

- Frame designation (actual frame size in which the motor is built)
- Horsepower, speed, design and enclosure
  Voltage, frequency and number of phases of power supply
- Class of insulation and time rating
- Application

Motor Nameplate – The plate on the outside of a motor that describes the motor, horsepower, voltage, revolutions per minute, efficiency, design, enclosure, etc.

NEMA (National Electrical Manufacturer's Association) – A non-profit organization organized and supported by manufacturers of electric equipment and supplies. NEMA has set standards for: horsepower ratings, speeds, frame sizes and dimensions, standard voltages and frequencies with allowable variations, service factors, torque, starting current, and enclosures.

Network – A series of stations (nodes) connected by some type of communication medium. A network may be made up of a single link or multiple links.

Node – The connection point at which media access is provided.

Non-Retentive – Changes to the parameter value are not saved when power is removed.

Non-Volatile Storage (NVS) – NVS is the permanent memory of a device. Devices such as the converter store parameters and other information in NVS so that they are not lost when the device loses power. NVS is sometimes called EEPROM.

Output Parameter – Provides output information. Value cannot be changed through the OIM.

Overcurrent – A current greater than a specified maximum current value.

Overload Capacity – The ability of the drive to withstand currents beyond the system's continuous rating. It is normally specified as a percentage of full load current for a specified time period.

Peripheral Equipment – In a programmable controller system, units that communicate with the programmable controller, but are not part of the programmable controller. For example, a programmable device or printer.

Phase – Indicates changing values of the recurring cycles of AC voltages and currents. The most common power supplies are either single- or three-phase (with 120 electrical degrees between three-phases).

Potentiometer – A resistor with one or more adjustable sliding contacts that function as an adjustable voltage divider.

Power – Work done per unit time. Measured in horsepower or watts: 1 Hp = 33,000 ft-lb/min = 746 watts.

Power Factor – A measurement of the time phase difference between the voltage and current in an AC circuit. Power factor is the ratio of real power (kW) to total KVA or the ratio of actual power (W) to apparent power (volt-amperes).

Glossary of Terms

Preset Speed – Describes one or more fixed speeds at which a drive operates.

Program – A set of instructions used to control a machine or process.

Programmable Controller – A solid-state control system that has a user-programmable memory for storage of instructions to implement specific functions such as I/O control, logic, timing, counting, report generation, communication, arithmetic, and data file manipulation. A controller consists of a central processor, input/output interface, and memory.

Programmable Controller Communications Command (PCCC) – The protocol used by some controllers to communicate with devices on a network. Some software products also use PCCC to communicate.

Pulse – A momentary, sharp change in voltage, current, or light from its quiescent condition.

Pulse-Width-Modulation (PWM) – A technique used to eliminate or reduce unwanted harmonic frequencies when inverting DC voltage to sine wave AC.

Queue – A logical structure that keeps track of items waiting for processing whenever the system is unable to process each item immediately. It controls the order in which the waiting items are ultimately processed.

Rated Input Voltage – The specified AC line voltage connected to the drive.

Rated Output Current – The total maximum current delivered from a drive or to a motor under full load conditions.

Rated Output Voltage – The total maximum output voltage while delivering rated current under full load conditions.

Rectifier – A device that conducts current in only one direction, thereby transforming alternating current to direct current.

Regeneration –
1. For DC drives, the characteristic of a motor to act as a generator when the counter emf is larger than the drive's applied voltage.
2. For AC drives, the point at which rotor synchronous frequency is greater than the applied frequency.

Regenerative Braking – See Braking.

Regenerative Control – A regenerative drive contains the inherent capability and/or power semiconductors to control the flow of power to and from the motor.

Remote I/O – I/O connected to a processor across a serial link. With a serial link, remote I/O can be located long distance from the processor.

Revolutions Per Minute (RPM) – The number of times per minute the shaft of the motor (machine) rotates.

Service Factor (SF) – When used on a motor nameplate, a number that indicates how much above the nameplate rating a motor can be loaded without causing serious degradation. For example, a 1.15 SF can produce 15% greater torque than a 1.0 SF rating of the same motor.

Slave – In a communication link, a station that cannot initiate communication. Only a master can initiate communication.

Speed Range – The speed minimum and maximum at which a motor must operate under constant or variable torque load conditions.

Stall – A motor state in which the motor remains motionless although the motor is generating torque.

Stator – The part of an AC induction motor's magnetic structure which does not rotate.

Status – The condition at a particular time of any of numerous entities within a system.

Status Indicators – LEDs that are used to report the status of a device.

Surge Suppressor – Circuit protection that suppresses the peak value of any unusual input voltage to the drive. It is sometimes used to lighten the leading edge of voltage.

Tachometer – Normally used as a rotation sensing device. Tachometers are typically attached to the output shaft of a motor requiring close speed regulation. The tachometer feeds its signal to a control loop, which adjusts its input to the motor accordingly.

Throughput – The rate at which equipment processes or transmits data.

Top Speed – The highest speed a drive can achieve. Top speed equals base speed when there is no field weakening.

Torque – Turning force delivered by a motor or gearmotor shaft, usually expressed in pounds-feet or newton-meters:

lb-ft = HP x (5250/RPM) = Full Load Torque;
Nm = P(kW) x (9550/RPM) = Full Load Torque;

Torque Compensation – The increase of the volts/frequency ratio of the drive in the low frequency area to compensate for the reduced torque of the motor at low speeds. Reduced torque at low speeds is due to the resistance of the motor stator windings.

BALDOR

Glossary of Terms

Transducer – A device that converts one energy form to another. When a transducer is actuated by signals from one system or medium, it can supply a related signal to the other system or medium.

Tunable – Input parameter whose value can be modified at any time (when the drive is stopped, running, or jogging).

Type 0/Type 1/Type 2 Control – When transmitting I/O, the module can use different types of messages for control. The Type 0, Type 1, and Type 2 events help Baldor personnel identify the type of messages that a module is using.

U.L. (Underwriter's Laboratory) – An independent testing organization, which examines and tests devices, systems and materials with particular reference to life, fire and casualty hazards.

Variable Torque – A multi-speed motor used on loads with torque requirements, which vary with speed as with some centrifugal pumps and blowers. The horsepower varies as the square of the speed.

Voltage – The force that causes a current to flow in an electrical circuit. Analogous to pressure in hydraulics, voltage is often referred to as electrical pressure. The voltage of a motor is usually determined by the supply to which it is attached. NEMA requires that the motor be able to carry its rated horsepower at nameplate voltage plus or minus 10% although not necessarily at the rated temperature rise.

Voltage Feedback – A voltage signal which the regulator uses to control the operation of the drive.

Volts per Hertz (V/Hz) – The ratio of output voltage (in volts) to output frequency (in hertz) in the output frequency range of the drive to achieve constant torque in the motor.

VS Utilities Software – A Windows-based software tool for monitoring and configuring Baldor products and modules.

Watt (W) – The amount of power required to maintain a current of one ampere at a pressure of one volt. One horsepower is equal to 756 watts.

Word – A grouping or a number of bits in a sequence that is treated as a unit.

Work – A force moving an object over a distance. Work = Force x Distance.

Index

Catalog Number	Page
6V51-062TA	101
6V51-077NA	101
6V51-099NA	101
6V51-125NA	101
6V51-144NA	101
9C16	114
9C17	114
9C80	114
9C81	114
9C90	114
9C91	114
9C200	114
9C201	114
9C210	114
9C211	114
9C220	114
9C221	114
9C230	114
9C231	114
9C240	114
9C241	114
9C300	114
9C301	114
9C310	114
9C311	114
9C320	114
9C321	114
9C330	114
9C331	114
9C340	114
9C341	114
77530-15D	106
77530-16A	106
77530-16B	106
77530-16D	106
77530-16E	106
77530-16F	106
77530-16G	106
77530-16H	106
77530-16J	106
77530-17A	106
77530-17B	106
77530-17D	106
77530-17E	106
77530-17F	106
77530-17G	106
77530-17H	106
77530-17J	106
417104-10	108
417104-11	108
417104-12	108
417104-13	108
417104-14	108
417104-15	108
ACB003A01	104
BC19H205-CO	131
BC19H210-CO	131
BC19H215-CO	131
BC19H220-CO	131
BC19H225-CO	131
BC19H240-CO	131
BC19H250-CO	131
BC19H260-CO	131
BC19H275-CO	131
BC19H410-CO	131
BC19H420-CO	131
BC19H430-CO	131
BC19H440-CO	131
BC19H450-CO	131
BC19H475-CO	131
BC19H4100-CO	131
BC19H4125-CO	131
BC19H4150-CO	131
BC19H4200-CO	131
BC19H4300-CO	131
BC20H205-CL	137
BC20H210-CL	137
BC20H215-CL	137
BC20H220-CL	137
BC20H225-CL	137
BC20H240-CL	137
BC20H250-CL	137
BC20H260-CL	137
BC20H275-CL	137
BC20H410-CL	137
BC20H420-CL	137
BC20H430-CL	137
BC20H440-CL	137
BC20H450-CL	137
BC20H475-CL	137
BC20H4100-CL	137
BC20H4125-CL	137
BC20H4150-CL	137
BC20H4200-CL	137
BC20H4250-CL	137
BC20H4300-CL	137
BC24-LF	116
BC110	116
BC115	116
BC130	116
BC138	116, 121
BC139	116, 121
BC140	116, 121
BC140-FBR	116, 121
BC141	117, 122
BC141-SIH	117
BC142	117, 122
BC142-5	117
BC142-6	117, 122
BC142-6-SIH	117
BC142-SIH	117
BC143	116, 120
BC144	116
BC145	116, 119
BC146	116
BC147	116
BC148	116
BC149	116
BC152	116
BC153	119
BC154	119, 121
BC154-P	119
BC154-R	119
BC154-SI	119
BC155	117, 122
BC156	119
BC157	119
BC158	119
BC159	119
BC160	119, 121
BC200	120, 122
BC201	120, 122
BC203	120, 122
BC204	120, 122
BC204-BPSI	120
BC212	120
BC215	120
BC216	120
BC218	116, 120
BC245	120
BC253	120
BC254	119, 120
BC254-FBR	119, 120
BC258	120
BC259	120
BC354	119
BCWD140	119, 121
BR0006	118
BR0010SP	118
BR0015SP	118
BR0025	118
BR0035	118
BR0050	118
BR0100	118
BR0101	118
BR0180	118
BR0250	118
BR0251	118
BR0350	118
BR0510	118
BR1000	118
CBLH015KP	103
CBLH030KP	103
CBLH046KP	103
CBLH061KP	103

BALDOR

Index

Catalog Number	Page
CBLH091KP	103
CBLH152KP	103
CBLH229KP	103
CBLH305KP	103
CBLHH015KP	81
CBLHH030KP	81
CBLHH046KP	81
CBLHH061KP	81
CBLHH091KP	81
CBLHH152KP	81
CBLHH229KP	81
CBLHH305KP	81
CBLHH457KP	81
CBLHH610KP	81
DTM8000-6	113
EM0002A01	43
EXB003A04	104
EXB003A05	104
EXB004A01	104
EXB005A01	104
EXB006A01	104
EXB007A02	105
EXB008A01	105
EXB010A01	105
EXB012A01	105
EXB013A01	105
EXB014A01	105
EXB015A01	105
EXBHH001A01	82
EXBHH003A01	82
EXBHH005A01	82
EXBHH007A01	82
EXBHH013A02	82
EXBHH014A01	82
EXBHH015A01	82
EXBHH016A01	82
EXBHH017A01	82
ID5AMS-1	91
ID5FRS-1	91
ID5FRS-2	91
ID5RGA-1	91
ID5SI-1	91
ID5SI-2	91
ID56F50-CO	91
ID5202-CO	91
ID5203-BO	91
ID5203-CO	91
ID5203-WO	91
ID5401-CO	91
ID5402-CO	91
ID5403-BO	91
ID5403-CO	91
ID5403-WO	91
ID5405-BO	91
ID5405-CO	91
ID5405-WO	91
ID5601-BO	91
ID5601-CO	91
ID5601-EO	91
ID5601-WO	91
ID5602-BO	91
ID5602-CO	91
ID5602-WO	91
LRAC080BTB	44, 110, 111
LRAC110ACB2	44, 110
LRAC110BCB	44, 110, 111
LRAC130ACB2	110, 111
LRAC130BCB	110, 111
LRAC160ACB2	44, 110, 111
LRAC160BCB	44, 110, 111
LRAC200ACB	44, 110, 111
LRAC00201	110, 111
LRAC00202	110, 111
LRAC250ACB2	111
LRAC360ACB2	44, 110, 111
LRAC00401	110, 111
LRAC00402	110, 111
LRAC00403	110, 111
LRAC420ACB2	44, 110, 111
LRAC480ACB2	110, 111
LRAC600ACB	44, 110
LRAC00801	110, 111
LRAC00802	110, 111
LRAC00803	110, 111
LRAC01201	110, 111
LRAC01202	110, 111
LRAC01801	110, 111
LRAC01802	44, 110, 111
LRAC02501	110, 111
LRAC02502	44, 110, 111
LRAC03501	44, 110, 111
LRAC03502	44, 110, 111
LRAC04501	44, 110, 111
LRAC04502	44, 110, 111
LRAC05501	44, 110, 111
LRAC05502	44, 110
LRAC08002	44, 110, 111
LRENC-8	111
LRENC-13	111
LRENC-15	111
LRENC-20S	111
RGA620	81
RGA630	81
RGA660	81
RGA1204	81
RGA1206	81
RGA1210	81
RGA1220	81
RGA1224	81
RGA1230	81
RGA1260	81
RGA2404	81
RGA2406	81
RGA2410	81
RGA2420	81
RGA2424	81
RGA2430	81
RGA2460	81
RGA4802	81
RGA4804	81
RGA4806	81
RGA4810	81
RGA4814	81
RGA4820	81
RGA4824	81
RGA4830	81
RGA4860	81
RGA6120	81
RGA6402	81
RGA6404	81
RGA6414	81
RGA9602	81
RGA9604	81
RGA12120	81
RGA14202	81
RGA14204	81
RGA24120	81
VS1-COMMUSB	42
VS1GV21-1B	65
VS1GV21-4B	67
VS1GV22-1B	65
VS1GV22-4B	67
VS1GV23-1B	65
VS1GV23-4B	67
VS1GV25-1B	65
VS1GV25-4B	67
VS1GV27-1B	65
VS1GV27-4B	67
VS1GV41-1B	65
VS1GV41-4B	67
VS1GV42-1B	65
VS1GV42-4B	67
VS1GV43-1B	65
VS1GV43-4B	67
VS1GV45-1B	65
VS1GV45-4B	67
VS1GV47-1B	65
VS1GV47-4B	67
VS1GV51-1B	66
VS1GV51-4B	67
VS1GV52-1B	66
VS1GV52-4B	67
VS1GV53-1B	66
VS1GV53-4B	67
VS1GV55-1B	66

Index

Catalog Number	Page
VS1GV55-4B	67
VS1GV57-1B	66
VS1GV57-4B	67
VS1GV61-1B	65
VS1GV61-4B	67
VS1GV62-1B	65
VS1GV62-4B	67
VS1GV63-1B	65
VS1GV63-4B	67
VS1GV210-1B	65
VS1GV215-1B	65
VS1GV220-1B	65
VS1GV225-1B	65
VS1GV230-1B	65
VS1GV240-1B	65
VS1GV250-1B	65
VS1GV260-1B	65
VS1GV410-1B	65
VS1GV410-4B	67
VS1GV415-1B	65
VS1GV420-1B	65
VS1GV425-1B	65
VS1GV430-1B	65
VS1GV440-1B	65
VS1GV450-1B	65
VS1GV460-1B	65
VS1GV475-1B	65
VS1GV510-1B	66
VS1GV510-4B	67
VS1GV515-1B	66
VS1GV520-1B	66
VS1GV525-1B	66
VS1GV530-1B	66
VS1GV540-1B	66
VS1GV550-1B	66
VS1GV560-1B	66
VS1GV575-1B	66
VS1GV4100-1B	65
VS1GV4125-1B	65
VS1GV4150-1T*	65
VS1GV4200-1T*	65
VS1GV4250-1T*	65
VS1GV4300-1T	65
VS1GV4350-1T	65
VS1GV4400-1T	65
VS1GV4450-1T	65
VS1GV5100-1B	66
VS1GV5125-1B	66
VS1MD20P5	10
VS1MD20P5-8	10
VS1MD21	10
VS1MD21-8	10
VS1MD22	10
VS1MD22-8	10
VS1MD23	10
VS1MD23-8	10
VS1MD25	10
VS1MD25-8	10
VS1MD27	10
VS1MD27-8	10
VS1MD40P5	10
VS1MD40P5-8	10
VS1MD41	10
VS1MD41-8	10
VS1MD42	10
VS1MD42-8	10
VS1MD43	10
VS1MD43-8	10
VS1MD45	10
VS1MD45-8	10
VS1MD47	10
VS1MD47-8	10
VS1MD210	10
VS1MD210-8	10
VS1MD215	10
VS1MD215-8	10
VS1MD220	10
VS1MD220-8	10
VS1MD225	10
VS1MD225-8	10
VS1MD230	10
VS1MD230-8	10
VS1MD410	10
VS1MD410-8	10
VS1MD415	10
VS1MD415-8	10
VS1MD420	10
VS1MD420-8	10
VS1MD425	10
VS1MD425-8	10
VS1MD430	10
VS1MD430-8	10
VS1MD-CCL	12
VS1MD-DINA	11
VS1MD-DINB	11
VS1MD-DINC	11
VS1MD-DNET	12
VS1MD-ENET	12
VS1MD-NM1A	11
VS1MD-NM1B	11
VS1MD-NM1C	11
VS1MD-NM1D	11
VS1MD-NM1E	11
VS1MD-NM1F	11
VS1MD-PBUS	12
VS1MD-RKEY2	12
VS1MD-RKEY3	12
VS1MD-RKEY5	12
VS1MX10P5-2	18
VS1MX10P5-2D	18
VS1MX10P5-4	18
VS1MX10P5-4D	18
VS1MX11-2	18
VS1MX11-2D	18
VS1MX11-4	18
VS1MX11-4D	18
VS1MX11P5-2T	18
VS1MX11P5-2TD	18
VS1MX11P5-4T	18
VS1MX11P5-4TD	18
VS1MX20P5-2	20
VS1MX20P5-2D	20
VS1MX20P5-4	19
VS1MX20P5-4D	19
VS1MX21-2	20
VS1MX21-2D	20
VS1MX21-4	19
VS1MX21-4D	19
VS1MX22-2	20
VS1MX22-2D	20
VS1MX22-2T	20
VS1MX22-2TD	20
VS1MX22-2TDF	20
VS1MX22-2TF	20
VS1MX22-4	19
VS1MX22-4D	19
VS1MX22-4T	19
VS1MX22-4TD	19
VS1MX22-4TDF	19
VS1MX22-4TF	19
VS1MX23-2T	20
VS1MX23-2TD	20
VS1MX23-2TDF	20
VS1MX23-2TF	20
VS1MX23-4T	19
VS1MX23-4TD	19
VS1MX23-4TDF	19
VS1MX23-4TF	19
VS1MX25-4T	19
VS1MX25-4TD	19
VS1MX25-4TDF	19
VS1MX25-4TF	19
VS1MX41-2	21
VS1MX41-2D	21
VS1MX41-2DF	21
VS1MX41-2F	21
VS1MX41-4	20
VS1MX41-4D	20
VS1MX41-4DF	20
VS1MX41-4F	20
VS1MX42-2	21
VS1MX42-2D	21
VS1MX42-2DF	21
VS1MX42-2F	21
VS1MX42-2T	21

BALDOR

Index

Catalog Number	Page
VS1MX42-2TD	21
VS1MX42-2TDF	21
VS1MX42-2TF	21
VS1MX42-4	20
VS1MX42-4D	20
VS1MX42-4DF	20
VS1MX42-4F	20
VS1MX42-4T	20
VS1MX42-4TD	20
VS1MX42-4TDF	20
VS1MX42-4TF	20
VS1MX43-2T	21
VS1MX43-2TD	21
VS1MX43-2TDF	21
VS1MX43-2TF	21
VS1MX43-4T	20
VS1MX43-4TD	20
VS1MX43-4TDF	20
VS1MX43-4TF	20
VS1MX45-2T	21
VS1MX45-2TD	21
VS1MX45-2TDF	21
VS1MX45-2TF	21
VS1MX45-4T	20
VS1MX45-4TD	20
VS1MX45-4TDF	20
VS1MX45-4TF	20
VS1MX47-4T	20
VS1MX47-4TD	20
VS1MX47-4TDF	20
VS1MX47-4TF	20
VS1MX80P5-2	19
VS1MX80P5-2D	19
VS1MX80P5-2DF	19
VS1MX80P5-2F	19
VS1MX80P5-4	18
VS1MX80P5-4D	18
VS1MX80P5-4DF	18
VS1MX80P5-4F	18
VS1MX81-2	19
VS1MX81-2D	19
VS1MX81-2DF	19
VS1MX81-2F	19
VS1MX81-4	18
VS1MX81-4D	18
VS1MX81-4DF	18
VS1MX81-4F	18
VS1MX82-2	19
VS1MX82-2D	19
VS1MX82-2DF	19
VS1MX82-2F	19
VS1MX82-2T	19
VS1MX82-2TD	19
VS1MX82-2TDF	19
VS1MX82-2TF	19
VS1MX82-4	18
VS1MX82-4D	18
VS1MX82-4DF	18
VS1MX82-4F	18
VS1MX82-4T	18
VS1MX82-4TD	18
VS1MX82-4TDF	18
VS1MX82-4TF	18
VS1MX83-2T	19
VS1MX83-2TD	19
VS1MX83-2TDF	19
VS1MX83-2TF	19
VS1MX83-4T	18
VS1MX83-4TD	18
VS1MX83-4TDF	18
VS1MX83-4TF	18
VS1MX410-4T	20
VS1MX410-4TD	20
VS1MX410-4TDF	20
VS1MX410-4TF	20
VS1MX-ILOCK	23
VS1MXS51	29
VS1MXS52	29
VS1MXS53	29
VS1MXS55	29
VS1MXS57	29
VS1PF27-1	35, 36, 38, 39, 42, 43, 44
VS1PF47-1	35, 36, 38, 42, 43, 44
VS1PF210-1	35, 36, 38, 39, 42, 43, 44
VS1PF215-1	35, 36, 38, 39, 43, 44
VS1PF220-9	35, 36, 38, 43, 44
VS1PF225-9	35, 36, 38, 43, 44
VS1PF230-9	35, 36, 38, 43, 44
VS1PF240-9	35, 36, 38, 43, 44
VS1PF410-1	35, 36, 38, 42, 43, 44
VS1PF415-1	35, 36, 38, 42, 43, 44
VS1PF420-9	35, 36, 38, 42, 43, 44
VS1PF420-9L	35, 36, 42, 43, 44
VS1PF420-9L*	38
VS1PF425-9	35, 36, 38, 42, 43, 44
VS1PF425-9L	35, 36, 42, 43, 44
VS1PF425-9L*	38
VS1PF430-9	35, 36, 38, 42, 43, 44
VS1PF430-9L	35, 36, 42, 43, 44
VS1PF430-9L*	38
VS1PF440-9	35, 36, 38, 43, 44
VS1PF440-9L	35, 36, 43, 44
VS1PF440-9L*	38
VS1PF450-9	35, 36, 38, 43, 44
VS1PF450-9L	35, 36, 43, 44
VS1PF450-9L*	38
VS1PF460-9	35, 36, 38, 43, 44
VS1PF460-9L	35, 36, 43, 44
VS1PF460-9L*	38
VS1PF475-9	35, 36, 38, 43, 44
VS1PF475-9L	35, 36
VS1PF475-9L*	38
VS1PF479-9L	43, 44
VS1PF4100-9	35, 36, 38, 43, 44
VS1PF4100-9L	35, 36, 43, 44
VS1PF4100-9L*	38
VS1PF4125-9	35, 36, 38, 43, 44
VS1PF4125-9L	35, 36, 43, 44
VS1PF4125-9L*	38
VS1PF4150-9L	35, 36, 43, 44
VS1PF4150-9L*	38
VS1PF4200-9L	35, 36, 43, 44
VS1PF4200-9L*	38
VS1PF4250-9L	35, 36, 43, 44
VS1PF4250-9L*	38
VS1PF4300-9L	35, 36, 43, 44
VS1PF4300-9L*	38
VS1PF4350-9L	35, 36, 43, 44
VS1PF4350-9L*	38
VS1PF4400-9L	35, 36, 43, 44
VS1PF4400-9L*	38
VS1PF4500-9	35, 36, 38, 43, 44
VS1PF4600-9	35, 36, 38, 43, 44
VS1PF4700-9	35, 36, 38, 43, 44
VS1PFB27-1	46, 47
VS1PFB27-1P	47
VS1PFB27-1R	47
VS1PFB47-1	46, 47
VS1PFB47-1P	47
VS1PFB47-1R	47
VS1PFB125-1	46
VS1PFB210-1	46, 47
VS1PFB210-1P	47
VS1PFB210-1R	47
VS1PFB215-1	46, 47
VS1PFB215-1P	47
VS1PFB215-1R	47
VS1PFB220-1	46, 47
VS1PFB220-1P	47
VS1PFB220-1R	47
VS1PFB225-1	46, 47
VS1PFB225-1P	47
VS1PFB225-1R	47
VS1PFB230-1	46, 47
VS1PFB230-1P	47
VS1PFB230-1R	47
VS1PFB240-1	46, 47
VS1PFB240-1P	47
VS1PFB240-1R	47
VS1PFB410-1	46, 47
VS1PFB410-1P	47
VS1PFB410-1R	47
VS1PFB415-1	46, 47
VS1PFB415-1P	47
VS1PFB415-1R	47

Index

Catalog Number	Page
VS1PFB420-1	46, 47
VS1PFB420-1P	47
VS1PFB420-1R	47
VS1PFB425-1	46, 47
VS1PFB425-1P	47
VS1PFB425-1R	47
VS1PFB430-1	46, 47
VS1PFB430-1P	47
VS1PFB430-1R	47
VS1PFB440-1	46, 47
VS1PFB440-1P	47
VS1PFB440-1R	47
VS1PFB450-1	46, 47
VS1PFB450-1P	47
VS1PFB450-1R	47
VS1PFB460-1	46, 47
VS1PFB460-1P	47
VS1PFB460-1R	47
VS1PFB475-1	46, 47
VS1PFB475-1P	47
VS1PFB475-1R	47
VS1PFB4100-1	46, 47
VS1PFB4100-1P	47
VS1PFB4100-1R	47
VS1PFB4125-1	47
VS1PFB4125-1P	47
VS1PFB4125-1R	47
VS1PF-BAC	40, 46
VS1PF-CBL2	40
VS1PF-CBL3	40
VS1PF-CBL5	40
VS1PF-DNET	40, 46
VS1PF-FFLT230	42
VS1PF-FFLT250	42
VS1PF-FFLT420	42
VS1PF-FFLT430	42
VS1PF-FFLT450	42
VS1PF-FFLT460	42
VS1PF-FFLT470	42
VS1PF-KPEXT	40
VS1PF-LON	40, 46
VS1PF-MAOUT	42
VS1PF-MBTCP	40, 46
VS1PF-MBUS	40, 46
VS1PF-MET	40, 46
VS1PF-NM1C	40
VS1PF-NM1D	40
VS1PF-NM1E	40
VS1PF-NM1F	40
VS1PF-NM1GH	40
VS1PF-NM1JK	40
VS1PF-NM1L	40
VS1PF-NM1M	40
VS1PF-PBUS	40, 46
VS1PF-RKEYN4	40
VS1PFS250-9	39
VS1PFS260-9	39
VS1PFS275-9	39
VS1PF-SFLT230	43
VS1PF-SFLT250	43
VS1PF-SFLT270	43
VS1PF-SFLT420	43
VS1PF-SFLT430	43
VS1PF-SFLT450	43
VS1PF-SFLT460	43
VS1PF-SFLT470	43
VS1PF-SFLT2100	43
VS1PF-SFLT2120	43
VS1PF-SFLT2150	43
VS1PF-SFLT4100	43
VS1PF-SFLT4120	43
VS1PF-SFLT4180	43
VS1PF-SFLT4250	43
VS1PF-SFLT4320	43
VS1PF-SFLT4400	43
VS1PF-SFLT4600	43
VS1PF-SFLT41000	43
VS1PF-T220	41
VS1PF-T230	41
VS1PF-T250	41
VS1PF-T275	41
VS1PF-T420	41
VS1PF-T430	41
VS1PF-T450	41
VS1PF-T475	41
VS1PF-T4100	41
VS1-R5W3600	41
VS1-R8W2400	41
VS1-R10W2400	13, 41
VS1-R15W1200	13, 41
VS1-R20W800	13, 41
VS1-R20W3600	41
VS1-R30W2400	41
VS1-R33W600	13
VS1-R40W2000	13, 41
VS1-R50W400	13
VS1-R60W1200	13, 41
VS1-R85W1000	13, 41
VS1-R100W200	13
VS1-R100W400	13
VS1-R130W600	13
VS1-R160W200	13
VS1-R200W200	13
VS1-R200W400	13
VS1SM80P5	32
VS1SM80P5-F	32
VS1SM81	32
VS1SM81-F	32
VS1SM82	32
VS1SM82-F	32
VS1SM83	32
VS1SM83-F	32
VS1SP21-1B	54
VS1SP21-4B	56
VS1SP22-1B	54
VS1SP22-4B	56
VS1SP23-1B	54
VS1SP23-4B	56
VS1SP25-1B	54
VS1SP25-4B	56
VS1SP27-1B	54
VS1SP27-4B	56
VS1SP41-1B	54
VS1SP41-4B	56
VS1SP42-1B	54
VS1SP42-4B	56
VS1SP43-1B	54
VS1SP43-4B	56
VS1SP45-1B	54
VS1SP45-4B	56
VS1SP47-1B	54
VS1SP47-4B	56
VS1SP51-1B	55
VS1SP51-4B	56
VS1SP52-1B	55
VS1SP52-4B	56
VS1SP53-1B	55
VS1SP53-4B	56
VS1SP55-1B	55
VS1SP55-4B	56
VS1SP57-1B	55
VS1SP57-4B	56
VS1SP61-1B	54
VS1SP61-4B	56
VS1SP62-1B	54
VS1SP62-4B	56
VS1SP63-1B	54
VS1SP63-4B	56
VS1SP210-1B	54
VS1SP215-1B	54
VS1SP220-1B	54
VS1SP225-1B	54
VS1SP230-1B	54
VS1SP240-1B	54
VS1SP250-1B	54
VS1SP260-1B	54
VS1SP410-1B	54
VS1SP410-4B	56
VS1SP415-1B	54
VS1SP420-1B	54
VS1SP425-1B	54
VS1SP430-1B	54
VS1SP440-1B	54
VS1SP450-1B	54
VS1SP460-1B	54

BALDOR

Index

Catalog Number	Page
VS1SP475-1B	54
VS1SP510-1B	55
VS1SP510-4B	56
VS1SP515-1B	55
VS1SP520-1B	55
VS1SP525-1B	55
VS1SP530-1B	55
VS1SP540-1B	55
VS1SP550-1B	55
VS1SP560-1B	55
VS1SP575-1B	55
VS1SP4100-1B	54
VS1SP4125-1B	54
VS1SP4150-1B*	54
VS1SP4200-1B*	54
VS1SP4250-1B*	54
VS1SP4300-1	54
VS1SP4350-1	54
VS1SP4400-1	54
VS1SP4450-1	54
VS1SP5100-1B	55
VS1SP5125-1B	55
VS1ST-2ROUT	25
VS1ST10P5-0	15
VS1ST11-0	15
VS1ST11P5-0T	15
VS1ST20P5-0	15
VS1ST21-0	15
VS1ST22-0	15
VS1ST22-0T	15
VS1ST22-0TF	15
VS1ST23-0T	15
VS1ST23-0TF	15
VS1ST25-0T	15
VS1ST25-0TF	15
VS1ST41-0	15
VS1ST41-0F	15
VS1ST42-0	15
VS1ST42-0F	15
VS1ST42-0T	15
VS1ST42-0TF	15
VS1ST43-0T	15
VS1ST43-0TF	15
VS1ST45-0T	15
VS1ST45-0TF	15
VS1ST47-0T	15
VS1ST47-0TF	15
VS1ST80P5-0	15
VS1ST80P5-0F	15
VS1ST81-0	15
VS1ST81-0F	15
VS1ST82-0	15
VS1ST82-0F	15
VS1ST82-0T	15
VS1ST82-0TF	15
VS1ST83-0T	15
VS1ST83-0TF	15
VS1ST410-0T	15
VS1ST410-0TF	15
VS1ST415-0T	15
VS1ST415-0TF	15
VS1ST-CBL0P5	22
VS1ST-CBL1	22
VS1ST-CBL3	22
VS1ST-CCL	22
VS1ST-DNET	24
VS1ST-HVAC	25
VS1ST-J45SP	22
VS1ST-LOGHV-11	25
VS1ST-LOGHV-23	25
VS1ST-PBUS	24
VS1ST-R100W200	23
VS1ST-RKEY3	22, 30
VS1STS51	27
VS1STS52	27
VS1STS53	27
VS1STS55	27
VS1STS57	27
VS1STS510	27
VS1STS515	27
VS1STS520	27
VS1STS530	27
VS1STS540	27
VS1STS560	27
VS1STS-CBL0P3	30
VS1STS-CBL1	30
VS1STS-CBL3	30
VS1STS-J11SP	30
ZD22H210-EL	103
ZD22H215-EL	103
ZD22H220-EL	103
ZD22H225-EL	103
ZD22H230-EL	103
ZD22H240-EL	103
ZD22H250-EL	103
ZD22H410-EL	103
ZD22H415-EL	103
ZD22H420-EL	103
ZD22H425-EL	103
ZD22H430-EL	103
ZD22H440-EL	103
ZD22H450-EL	103

Baldor Drives Service Centers

Name	Address	City	State/ Country	Zip	District Office	Phone	Fax
Flowmatcher	33900 Roche Lane	Corvallis	OR	97333	01 Portland	541-752-5101	
Pacific Industrial Electric	2375 McGilchrist S.E.	Salem	OR	97302	01 Portland	800-670-2477	5803-581-0548
Taurus Controls	9999 SW Avery Street	Tualatin	OR	97062	01 Portland	503-692-9004	503-692-9273
Taurus Controls	6617 South 193rd Place, Suite P 104	Kent	WA	98032	01 Portland	425-656-4170	
H & N Electric, Inc.	1820 East Dock Street	Pasco	WA	99301	01 Portland	509-547-1691	
Practec LLC	17625 NE 65th St. Suite 125	Redmond	WA	98052	01 Portland	425-881-8202	425-881-5209
Electric Motor Service and Sales LLC	1928 Milwaukee Way	TACOMA	WA	98421	01 Portland	253-383-5453	253-383-4965
Industrial Electrical	1417 Coldwell Ave	Modesto	CA	95350	02 Hayward	209-527-2800	209-527-4457
Ortman Electronics	3445 Collins Avenue, Suite 801	Richmond	CA	94806	02 Hayward	510-222-9001	510-222-9002
Standard Electric	930 Linden Ave	S. San Francisco	CA	94080	02 Hayward	650-952-6500	650-952-0102
Pritchard Electric Company	6849 Sutter Avenue	Sutter	CA	95982	02 Hayward	530-701-1022	530-755-1520
Arizona Fuses dba Chapman Electric	6040 N. 57th Avenue	Glendale	AZ	85301	03 Los Angeles	623-915-0350	623-937-6396
Equipment Maintenance Service	2412 W. Durango Street	Phoenix	AZ	85009	03 Los Angeles	602-258-8545	
Bestway Electric Motor Service Co.	728 S. Campbell Avenue	Tucson	AZ	85719	03 Los Angeles	520-884-9141	
Motors & Controls Warehouse	1440 Burton Place	Anaheim	CA	92806	03 Los Angeles	714-956-0480	714-956-0486
Control Concepts	6925 Aragon Circle, Suite #2	Buena Park	CA	90620	03 Los Angeles	714-739-3100	714-739-3110
Industrial Electronic Controls, LLC	7250 Bandini Blvd. Unit 112	Commerce	CA	90040	03 Los Angeles	323-725-0246	323-725-0289
Industrial Electric & Controls Co.	2506 W. Barberry Place	Denver	CO	80204	04 Denver	303-794-3414	
Wazee Electric Company	2020 West Barberry Place	Denver	CO	80204	04 Denver	303-623-8658	
Associated Coil	5954 Grandview Drive	Boise	ID	83709	04 Denver	208-322-6999	208-322-4642
Gem State Electric Co	112 W. 32nd ST	Boise	ID	83714	04 Denver	208-344-5461	208-344-6182
Electric Motor Service	527 S Utah	Idaho Falls	ID	83402	04 Denver	208-522-4256	208-522-1820
Riverside Electric	111 South Roswell Blvd.	Parma	ID	83660	04 Denver	208-722-6731	208-722-6736
Lane Electric, Inc.	1905 Fawcett Court	Farmington	NM	87401	04 Denver	505-327-9442	
Industrial Electric Motor Service	PO Box 485	Orangeville	UT	84537	04 Denver	435-748-2828	
Asao	5033 Avon Dr.	Mound	MN	55364	05 Minneapolis	952-495-8199	952-495-1034
Profix Technical Services	4976 Highway 169 North	New Hope	MN	55428	05 Minneapolis	763-533-1100	763-533-1141
Warwick Industrial	8204 West 125th St.	Savage	MN	55378	05 Minneapolis	952-894-0295	952-894-0721
Janda Electric Motor	1716 Blairs Ferry Rd NE	Cedar Rapids	IA	52402	06 Des Moines	319-393-1230	319-393-6911
Electrical Engineering & Equipment	1808 Delaware	Des Moines	IA	50317	06 Des Moines	515-266-8890	515-266-1181
S.A. Merrill Electrical Services Inc.	1551 N Courtney Rd, Unit B	Independence	MO	64050	07 Kansas City	816-461-2686	816-461-2607
Yates Electric	1401 Burlington	North Kansas City	MO	64116	07 Kansas City	816-421-8343	816-421-1863
Industrial Electric Motors	9770 South 142nd Street	Omaha	NE	68138	07 Kansas City	402-342-1191	402-342-7950
GE Jones Electric	P.O. Drawer 2049 212 North Polk	Amarillo	TX	79105	08 Dallas	806-372-5505	806-372-9586
Control Concepts	13663 Jupiter Road, Suite 406	Dallas	TX	75238	08 Dallas	214-349-4414	214-349-4435
Specialized Electronic Services	13650 TI Blvd. Suite 302	Dallas	TX	75243	08 Dallas	972-680-9210	972-690-9200
Lektrotech, Inc	6800 Hwy 66	Greenville	TX	75404	08 Dallas	903-454-7146	903-454-7315
Lubbock Electric Company	1108 34th Street	Lubbock	TX	79405	08 Dallas	806-744-2336	806-744-5690

BALDOR

Baldor Drives Service Centers

Name	Address	City	State/ Country	Zip	District Office	Phone	Fax
Whitlock Instrument	1300 North Texas	Odessa	TX	79761	08 Dallas	915-337-3412	915-335-5926
Sweetwater Electric and Supply	2311 East Broadway	Sweetwater	TX	79556	08 Dallas	915-235-3456	915-236-6186
A.I.M. Controls	3610 Willowbend	Houston	TX	77054	09 Houston	713-666-4999	713-666-4060
Control Concepts	8732 Clay Road, Suite 320	Houston	TX	77080	09 Houston	713-460-2516	713-939-7445
Electric Motor Service-Kaukauna	1150 Prospect Lane	Kaukauna	WI	54130	10 Milwaukee	920-766-0166	
Electric Motors Unlimited, Inc.	1000 Jonathon Drive	Madison	WI	53713	10 Milwaukee	608-271-2311	
Motor & Control Service, Inc.	712 Valley Road	Menasha	WI	54952	10 Milwaukee	920-831-0180	
Nova Systems Inc.	11629 West Dearbourn Ave.	Milwaukee	WI	53226	10 Milwaukee	414-771-4800	414-771-4847
Profix Electronic Repair Inc	2325 Parklawn Drive Unit E	Waukesha	WI	53186	10 Milwaukee	262-798-8011	262-798-8089
The Flolo Corporation	1061 E. Green St.	Bensenville	IL	60106	11 Chicago	630-595-1010	
The Flolo Corporation	1593 Valencia Ct	Calumet City	IL	60409	11 Chicago	708-730-0682	
Goding Electric	686 E Fullerton Ave	Glendale Heights	IL	60139	11 Chicago	630-858-7700	630-858-8019
The Flolo Corporation	1401 Delany Road	Gurnee	IL	60031	11 Chicago	847-249-0880	
Drive Controls	3232 Skokie Valley Rd.	Highland Park	IL	60035	11 Chicago	847-433-0755	847-433-0041
The Flolo Corporation	510 Stevenson	South Elgin	IL	60177	11 Chicago	847-695-4734	
Ampere Electric	374 Beinoris Avenue	Wood Dale	IL	60191	11 Chicago	630-227-1805	630-227-1820
Specialty Controls, Inc.	7150 Olcott Avenue	Hammond	IN	46323	11 Chicago	219-844-6946	219-844-2042
S & W Electric	106 Washington St.	La Porte	IN	46350	11 Chicago	219-362-4581	219-326-7940
Northern Electric	116 N Hill Street	South Bend	IN	46617	11 Chicago	574-289-7791	574-289-7795
United Electric	48 Empire Drive	Belleville	IL	62221	12 St. Louis	618-233-4424	618-233-0003
International Control Services, Inc.	606 West Imboden Drive	Decatur	IL	62521	12 St. Louis		
Scherer - Midland Division	1445 Monmouth Blvd	Galesburg	IL	61401	12 St. Louis	309-342-4125	309-342-3625
Vandalia Electric Motor Service	Route #185 West	Vandalia	IL	62471	12 St. Louis	618-283-0068	618-283-0253
Missouri Electric Motors & Controls	9921 Big Meadows Road	Jefferson City	MO	65101	12 St. Louis	573-636-7061	573-636-7226
Zeller Electric Company	4250 Hoffmeister Ave.	St. Louis	MO	63125	12 St. Louis	314-638-9641	314-638-6318
Richard J. Bagan, Inc.	1280 South Williams Drive	Columbia City	IN	46725	13 Indianapolis		
Creative Control Systems, Inc.	4208 Clubview Drive	Fort Wayne	IN	46804	13 Indianapolis	260-432-9020	260-436-0030
EMD , Inc.	561 Condit Street	Huntington	IN	46750	13 Indianapolis	260-359-1164	260-359-1165
Brehob Electric Equipment Company	1334 South Meridian Street	Indianapolis	IN	46225	13 Indianapolis	317-231-8080	317-231-8082
Industrial Machine Service, Inc.	130 Scranton Court	Zionsville	IN	46077	13 Indianapolis	317-259-9387	317-865-9233
Advanced Industrial Electronics, Inc.	11903 Plantside	Louisville	KY	40299	13 Indianapolis	502-267-8515	502-267-4312
Industrial Control Solutions	1939 Goldsmith Lane, Suite 22	Louisville	KY	40218	13 Indianapolis	502-459-5665	502-459-5943
Krauth Electric Company	4742 Allmond Ave.	Louisville	KY	40209	13 Indianapolis	502-361-1311	502-368-3377
Application Engineering Company	2025 Colonial Drive	Laplace	LA	70068	14 Memphis	985-652-8030	985-652-8030
Industrial Electronics Repair	46 County Rd 1	Dennis	MS	38838	14 Memphis	662-454-7394	662-454-3825
York Electric Motors Inc.	611 Andre Street	Bay City	MI	48076	15 Detroit	989-684-7460	989-684-7464
The Parker Group, Inc.	44810 Vic Wertz Drive	Clinton Townshop	MI	48036	15 Detroit	586-469-0606	
Fife Pearce Electric Company	20201 Sherwood	Detroit	MI	48234	15 Detroit	313-369-2560	313-369-1859
Michigan Industrial Controls	12301 B Cleveland Street	Nunica	MI	49448	15 Detroit	616-837-0090	616-837-0091
Michigan Industrial Controls	2402 Gratiot Ave	Port Huron	MI	48060	15 Detroit	810-984-3200	810-987-8470

Baldor Drives Service Centers

Name	Address	City	State/ Country	Zip	District Office	Phone	Fax
American Industrial Inc.	14240 Eleven Mile Road	Warren	MI	48084	15 Detroit	586-776-2121	586-0776-352
Spina Electric Company	26801 Groesbeck Hwy.	Warren	MI	48089	15 Detroit	586-771-8080	586-771-8170
Kentucky Service Company, Inc.	2328 Maggard Drive	Lexington	KY	40511	16 Cincinnati	859-254-6310	859-252-3747
EMR, Inc.	1024 Saratoga Street	Newport	KY	41071	16 Cincinnati	859-491-0200	859-491-0210
Zigtronics	1470 Dixie Highway	Park Hills	KY	41011	16 Cincinnati	859-291-2777	859-291-1025
Matlock Electric Company	2780 Highland	Cincinnati	OH	45212	16 Cincinnati	513-731-9600	513-731-9646
Sullivan Electric Group, Inc.	3650 Roll Ave.	Cincinnati	OH	45223	16 Cincinnati	513-241-5413	513-723-2143
Delta Electric Inc.	207 Riverview Avenue	Logan	WV	25601	16 Cincinnati	304-752-4625	304-752-0948
Carnation Electric Motor	232 North Lincoln Avenue	Alliance	OH	44601	17 Cleveland	330-823-7116	330-823-1802
Automation Services	16765 Park Circle Drive	Chagrin Falls	OH	44023	17 Cleveland	440-543-8146	
Redmond Waltz Electric	4126 St Clair Avenue	Cleveland	OH	44103	17 Cleveland	216/361-0014	216-361-6599
Mid Ohio Electric Company	1170 McKinley Ave.	Columbus	OH	43222	17 Cleveland	800-872-6446	614-274-1671
AMECO	724 Lowell Street	Elyria	OH	44035	17 Cleveland	440-899-9400	440-899-9401
Apex Control Systems, Inc.	751 N. 21 Street	Sebring	OH	44672	17 Cleveland	330-938-2588	330-938-6865
KAP Consulting LLC	2947 Springwater Drive	Toledo	OH	43617	17 Cleveland	419-843-6259	419-843-7045
Lemsco-Girkins Co.	2056 Canton Avenue	Toledo	OH	43620	17 Cleveland	419-242-4005	419-242-8587
C.P. Electric	2212 Aurora Rd.	Twinsburg	OH	44087	17 Cleveland	330-425-9593	330-425-3105
TriDelta Systems	330 Great Southern Way	Abbeville	AL	36310	18 Atlanta	334-585-1151	334-585-1189
Nelson Electric	Rt #1, Radio Road	Alexander City	AL	36310	18 Atlanta	256-234-3000	256-234-5045
C.I.C.E. Inc.	1401 Thompson Circle	Gardendale	AL	35071	18 Atlanta	205-631-1270	205-631-1272
Gulf Coast Air & Hydraulics	3415 Halls Mill Road	Mobile	AL	36693	18 Atlanta	251-666-6683	251-666-6684
Jay Electric	421 Randolph Street	Montgomery	AL	36104	18 Atlanta	334-263-0277	334-263-6104
Alabama Electric Motor Service	1714 Wall Street	Sheffield	AL	35660	18 Atlanta	256-383-1490	256-383-2391
Drivetech, Inc.	4187C Old Danielsville Rd	Athens	GA	30601	18 Atlanta	706-543-3388	706-543-2668
Cole Electric	1669 Westview Drive	Atlanta	GA	30310	18 Atlanta	404-752-7885	
Motion Industries, Inc.	7444 Airport Drive	Macon	GA	31206	18 Atlanta	478-784-3438	478-788-1500
Electronic Maintenance Assoc.	5952 Peachtree Ind. Blvd., Suite #9	Norcross	GA	30092	18 Atlanta	770-448-4644	
New Technology Services, Inc.	2002 Elberta Road	Warner Robins	GA	31093	18 Atlanta	478-922-8868	478-922-7487
Crimson Electric	110 Lee Joyal Road	Greer	SC	29651	18 Atlanta	864-877-3357	
Campbell Service, Inc.	14112 C. R. Koon Hwy.	Newberry	SC	29108	18 Atlanta	803-276-1032	803-276-9029
Tennessee Armature	1301 Galway Street, NE	Knoxville	TN	37917	18 Atlanta	865-524-3681	865-546-4657
United Automation & Electric, Inc.	4145 Appalachian Way	Knoxville	TN	37918	18 Atlanta	865-281-0201	865-281-0890
Bresnak Services Inc.	1600 N.W. Madrid Way	Boca Raton	FL	33432	19 Tampa	561-347-1300	561-347-1303
Electronic Controls, Inc.	7073 N. Atlantic Ave	Cape Canaveral	FL	32920	19 Tampa	321-783-5858	321-783-8989
Technical Drive Control Service	5081 S. State Road 7, Suite #819	Davie	FL	33314	19 Tampa	954-784-4958	954-784-4959
AC Industrial Service Inc.	268 West 23rd Street	Hialeah	FL	33010	19 Tampa	305-881-5541	305-887-5938
W. L. Smith Electronics, Inc.	7622 Main Street North	Jacksonville	FL	32206	19 Tampa	904-764-4221	904-764-3952
DriveTech Inc.	11805 N. Armenia Avenue	Tampa	FL	33612	19 Tampa	813-915-0087	813-932-9615
Smith Electric Motor	320 Campbell Street	Thomasville	GA	31799	19 Tampa	229-228-0670	229-228-6199
Paragon Atlantic	2129 Center Park Drive	Charlotte	NC	28217	21 Greensboro	800-756-9150	704-424-5960
SESCO	2225 Freedom Drive	Charlotte	NC	28208	21 Greensboro	704-372-4832	704-372-9688

BALDOR

Baldor Drives Service Centers

Name	Address	City	State/ Country	Zip	District Office	Phone	Fax
REA Technologies, Inc	1222 Emmanuel Church Rd, Suite 6	Conover	NC	28613	21 Greensboro	828-466-8280	828-466-8208
Electrical South	235 Burgess Road	Greensboro	NC	27409	21 Greensboro	800-950-9550	336-668-4878
K F Group	4250 Regency Drive	Greensboro	NC	27410	21 Greensboro	336-547-1934	336-547-1909
Quality Industrial Electronic	8642 W. Market Street	Greensboro	NC	27409	21 Greensboro	336-665-1999	336-665-9111
Sterling Services	3372 Smith Farm Road	Matthews	NC	28104	21 Greensboro	800-280-4602	704-821-3333
Servo South	3648 Oak Haven Lane	Shelby	NC	28150	21 Greensboro	866-737-8676	704-487-1816
Wilson's Industrial Electronics	2411 Ellis Road	Shelby	NC	28152	21 Greensboro	704 487 1805	704 484 1683
Electric Motor Shop	1225 North White Street	Wake Forest	NC	27588	21 Greensboro	919 556 3229	919 556 8680
Tech Star Inc.	2664 Virginia Avenue	Collinsville	VA	24078	21 Greensboro	276-647-4439	276-647-4239
Precision Electronics Services	332 Ringgold Industrial Parkway	Danville	VA	24540	21 Greensboro	434-792-5669	434-792-5672
Delta Automation, Inc.	2704 Charles City Road	Richmond	VA	23231	21 Greensboro	804-236-2800	804-236-2900
EMA of New York	165 Main Street	Cortland	NY	13045	22 Auburn	607-756-0424	607-756-0429
Jiro Electronics	43 Long Park Drive	Rochester	NY	14612	22 Auburn	716-723-8020	
Magna Products Corp.	777 Mt. Read Blvd.	Rochester	NY	14606	22 Auburn	585-647-2280	585-647-2155
Square One Electric Service Company	Fork Branch Road	Dover	DE	19904	23 Pennsauken	302-678-0400	
Hill's Electric Motor Service, Inc.	5203 Poplar Drive	Cambridge	MD	21613	23 Pennsauken	410-228-4447	
Park Electric	1413 Marmora Avenue	Atlantic City	NJ	08401	23 Pennsauken	609-344-8058	609-348-1141
CR Industrial Services	77 Cliffwood Avenue	Cliffwood	NJ	07721	23 Pennsauken	732-290-7177	732-290-7179
Willier Electric Motor Repair, Inc.	1 Linden Avenue	Gibbsboro	NJ	08026	23 Pennsauken	609-627-3535	
Radwell International Inc.	111 Mount Holly Bypass	Lumberton	NJ	08048	23 Pennsauken	800-332-4336	800-257-2869
Electronic Drives & Controls	17 Eastman Road	Parisippany	NJ	07054	23 Pennsauken	973-428-0500	
Eisenhardt Electric Motor Service, Inc.	6001 Route 130	Pennsauken	NJ	08110	23 Pennsauken	609-964-6944	
Silicon Power Controls, Inc.	334 North Second Street	Frackville	PA	17931	23 Pennsauken	570-874-0662	
Edwin L. Heim Company	1900 Greenwood Street	Harrisburg	PA	17104	23 Pennsauken	717-233-8611	
Sigmatronics	1305 Catfish Lane	Norristown	PA	19403	23 Pennsauken	610-650-0460	
Prime Technologies, Inc	20 Hagerty Blvd., Suite 1	West Chester	PA	19382	23 Pennsauken	610-436-9703	610-436-9097
Electric Enterprises	1410 Stratford Avenue	Stratford	CT	6615	24 Wallingford	203-378-7311	
Delta Electric Motor & Generator Co.	379 Alden Road	Fairhavens	MA	02719	24 Wallingford	508-997-0582	
Engineered Control Systems, Inc.	595 Airport Road	Fall River	MA	02720	24 Wallingford	508-679-9474	
McKenney Electrical Company, Inc.	100 Northampton Street	Holyoke	MA	01040	24 Wallingford	413-536-5551	
Pioneer Electric Motors, Inc.	30 Berard Drive, Unit #6	South Burlington	VT	5403	24 Wallingford	802-651-0114	802-651-0149
DEW Electric	189 Enterprise Lane	Connelsville	PA	15425	27 Pittsburg	724-628-9711	724-628-9722
Ace Viking	2222 E. 30th Street	Erie	PA	16510	27 Pittsburg	814-456-3131	
Erie Bearing Company	1432 East 12th Street	Erie	PA	16503	27 Pittsburgh	814-453-6871	814-456-6237
Electro-Mec, Inc.	4470 Lucerne Road	Indiana	PA	15701	27 Pittsburgh	724-479-9066	
Globe Electric	200 23rd Street	Pittsburgh	PA	15215	27 Pittsburgh	412-781-2677	412-781-1812
Moran System Integrators	1017 Larchdale Drive	Pittsburgh	PA	15243	27 Pittsburgh	412-561-1610	
Kauffman Electric Company	Boston & Highland Avenue	Baltimore	MD	21231	37 Baltimore	410-276-4000	
Swam Electric Company, Inc.	490 High Street	Hanover	PA	17331	37 Baltimore	717-637-3821	
WD Distributing	1701 N. Indian Wood Ave.	Broken Arrow	OK	74012	39 Tulsa	918-294-8889	918-294-1730

Baldor Drives Service Centers

Name	Address	City	State/ Country	Zip	District Office	Phone	Fax
WD Distributing	807 SE 83rd	Oklahoma City	OK	73149	39 Tulsa	405-634-3603	
Blanchard Electric Company	10 Buckley Ave.	Whitman	MA	02382	40 Boston	781-447-5122	781-447-3419
First Electric Motor Service	73 Olympia Ave.	Woburn	MA	01801	40 Boston	781-937-0226	781-938-3557
First Electric Motor Service	77 East Worcester St.	Worcester	MA	01604	40 Boston	508-799-6165	508-752-0317
A C Electric Corp	120 Merrow Road	Auburn	ME	04211	40 Boston	207-784-7341	207-782-6759
A C Electric Corp	40 Target Ind Circle	Bangor	ME	04401	40 Boston	207-945-9487	207-945-0114
New Hampshire Electric Motor	459 Province Rd RT 107	Laconia	NH	03246	40 Boston	603-524-3729	603-528-6188
Automation Engineering	4509 South 16th Street	Fort Smith	AR	72906	42 Clarksville	479-646-9994	
Evans Enterprises	4300 Planters Road	Ft. Smith	AR	72908	42 Clarksville	479-648-1500	
Evans Enterprises	2001 N. 13th Street	Rogers	AR	72756	42 Clarksville	479-636-0721	
Allied Electric and Power Of Ark	2320 Industrial Park Road	Van Buren	AR	72956	42 Clarksville	479-474-5272	479-474-0193
International Electronic Service Centers							
Noront Armature Service Ltd	1800 Bond Street	North Bay	ON	P1B	25 Toronto	705-474-8204	705-474-4451
Gain Control Ltd	2750 B Coventry Rd	Oakville	ON	L6H 6R1	25 Toronto	908-827-3930	905-829-5973
TDS Technologies	55 Rankin Place	Waterloo	ON	N2V	25 Toronto	519-8814-5500	
BJ Electric Motors and Control Ltd	225 George Street	Stewiacke	NS	B0N	28 Montreal	902-639-2464	
Meunier Electrique et Fils, Inc.	354 St.Vincent	Farnham	QC	J2N	28 Montreal	450-293-4302	450-293-1234
LM Electrique Inc	3006 Rue Ste-Catherine Est	Montreal	QC	H1W 2B8	28 Montreal	514-523-2831	514-521-2526
Systeme/Auto Integratech	440 Ch. Ville-Marie	Quebec	QC	G1T	28 Montreal	418-837-6831	
Davies Electric Company	602 48th Street East	Saskatoon	SK	S7K	29 Winnipeg	306-933-2433	
Probe Industrial Electronics, Ltd	1874 Partage Avenue	Winnipeg	MB	R3J OH2	29 Winnipeg	204-885-9320	204-888-7551
Elworthy Electrical Services	2360 Douglas Road	Burnaby	BC	V5C 5B2	30 CED Vancouver	604-299-4341	604-299-1717
TDS Controls & Automation	7-7551 Vantage Way	Delta	BC	V4G 1C9	30 CED Vancouver	604-940-7740	604-940-7749
GLC Controls LTD	1323 Kelliher Road	Prince George	BC	V2L 5S8	30 CED Vancouver	250-562-4343	250-562-4383
Arrow Speed Controls	111-8410 Ontario Street	Vancouver	BC		30 CED Vancouver	604-321-4033	
Troy Electric	#1 3131 Delta Street	Victoria	BC	V8Z 1A6	30 CED Vancouver	250-382-7442	250-382-7894
Alberta Industrial Controls	9720 47 Ave	Edmonton	AB	T6E 5P3	31 Edmonton	780-436-4848	780-438-2344
Electrotech Services Inc.	39 4004 97St	Edmonton	AB	T6E 6N1	31 Edmonton	780-445-9961	
GPR Industries (1994) Ltd	11115 100th Avenue	Grande Prairie	AB	T8V 3J9	31 Edmonton	780-532-5904	780-532-5904
Southern Rewind LTD	3131 2nd Ave. North	Lethbridge	AB	T1H 0C5	31 Edmonton	403-328-9049	403-328-9371
Australian Baldor Pty Ltd	Unit 3, 6 Stanton Road Seven Hills	New South Wales, 2147	AU		Australia	61 2 9674 5455	61 2 9674 2495
Tecmot	Rua Francisca, 627-Imirim	Sao Paulo-SP	Brazil		Brazil	55 11 6236 9228	
Suzhou Servo Dynamics	2nd Floor, Blk. No. 5 Shishan Ind. Park	Suzhou, Jiangsu Province	China	215011	Shanghai, China	86-512 6809 7576	86-512 6809 7690
Alpha Industry Co.	Na-1314, Chungang Circulation Complex	1258, Kurobon-Dong, Seoul	Korea	152-721	Singapore	82-2 2617 1333	82-2 2617 1334
Proma Industrial S.A. de C.V.	2 de Abril No 807	Apizaco, Tlaxcala	Mexico		Mexico	52 241 4-17-49-94	

BALDOR

Baldor Drives Service Centers

Name	Address	City	State/ Country	Zip	District Office	Phone	Fax
Digicontrol	Calle Periodismo No 1101-A, Fracc, Universidad	Chihuahua	Mexico		Mexico	52 614 4-14-27-68	4-14-69-43
Indel S.A.	Anahuac S/N Col. Ampliacion el Porvenir	Civac, Morelos	Mexico		Mexico	52 777 3-21-55-00	
Energia Dinamica S.A. de C.V.	Ant.Camino a San Pedro Martir No 187.Col.	Chimalcoyotl..D.F	Mexico		Mexico	52 55 55-13-02-52	56-55-23-02
Laboratorio de Electronica e Instrumentacion Industrial S.A de C.v	Av. Ing. Eduardo molina No 1727 Col.	Nueva Atzacoalco D.F.	Mexico		Mexico	52 55 57-67-10-99	
Sistemas de Fuerza Electromecanica S.A de C.V.	Playua Teclutia No 400.Col.	Reforma Iztaccihuatl D.F.C.P 08810	Mexico		Mexico	52 55 56-33-45-90	
Tecnicom Ingenieria	Dalias 348 Fracc, Girasoles, 2o sector Escobedo	Nuevo Leon	Mexico		Mexico	52 81 83-97-10-34	
Servicios de Mantenimiento y Control de Equipo Electrico Electronico	Enrique Granados No 3182 Col. San Andres	Guadalajara Jalisco	Mexico		Mexico	52 33 36-19-02-99	
Sydec Euipos Industriales S.A. de G.V.	Calle 4 No 2061. Col. Ferrocarril..	Guadalajara Jalisco	Mexico		Mexico	52 33 38-10-27-10	
Electro Control Industrial de Sonora.S.A. de G.V.	Gustavo Hodgers No50.Col. Modelo	Hermosillo, Sonora	Mexico		Mexico	52 662 2-10-23-22	
Instal S.A. de G.V.	Chiapas No 703-B.Col. Arbide;	Leon, Guanajuato	Mexico		Mexico	52 477 7-14-24-04	7-16-71-43
Centro Regional de Optimizacion y Desarrollo de Equipa-Merida	Calle 28 S/N por 13 Amplicacion Ciudad Industrial	Merida, Yucatan	Mexico		Mexico	52 999 9-46-16-62	
HMC Control y Electronica S.A. de G.V.	Chinconcuac No6. Izcalli Cuahutemoc IV	Metepec, Edo de Mexico	Mexico		Mexico	52 722 2-11-22-01	2-11-32-95
Baldor De Mexico, SACV	Calle Pablo Ucello No.27, Col Noche Buena 03710	Mexico City	Mexico		Mexico	52-5-6119920	
Baldor De Mexico, SACV	Villas de Portugal #275 Fracc. Roble Nuevo 66056	Monterey	Mexico		Mexico	52-8-3975050	
Motores y Controles Industriales S.A. de G.V.	1a Cerrada Batalla de Casa Mata 17-A. Col Chapultepec Sur	Morelia, Michoacan	Mexico		Mexico	52 443 3-14-59-01	
Mantenimiento Electronico Integral Industrial S.A. de G.V.	Coronelas No 204, Col.Benito Juarez Edo de Mexico	Nezahualcoyotl	Mexico		Mexico	52 55 57-30-82-35	
Control y Movimiento Industrial	Calle me voy No210.Col. Esperanza	Nezahualcoyotl	Mexico		Mexico	52 55 54-41-26-35	
Ingenieria de Proyectos Y Servicios Industriales S.A. de G.V.	Sur 9 No 715	Orizaba, Veracruz	Mexico		Mexico	52 272 7-25-14-47	
Control y Automatizacion Industrial del Norte S.A. de G.V.	Rio Colorado No 129.Col. Ugarte	Piedras Negras, Coahuila	Mexico		Mexico	52 878 7-83-52-90	
Reemi	68 Poniente No 717.Col. Guadalupe Victoria	Puebla	Mexico		Mexico	52 222 2-20-17-62	
Service S.A. de G.V.	Puerto las Truchas No103. Fracc.Las Brisas	Saltillo Coahuila	Mexico		Mexico	52 844 4-32-18-78	
SEPRO	Villa de las Fuentes #2, Avenida los Llanos,	Numero I-26 Corregimiento Bethania	Panama		Panama	507-236-5080	507-236-7476
Baldor Electric (Asia) Pte.Ltd.	51, Kaki Bukit Road 2 KB warehouse Complex	Singapore 417863	Singapore		Singapore	65 6744 2572	65 6747 1708
Baldor ASR AG	Schuetzenstrasse 59	Feuerthalen 8245	Switzerland		Switzerland	41 52 647 4700	41 52 659 2394
I.D.B. Electronics, G.A.	Zona Industrial Sur, Avenida Henry Ford, Edificio Orion, segundo iso, Oficina #44	Valencia	Venezuela		Venezuela	58-241-8345902	58-241-8254756

BALDOR SALES OFFICES

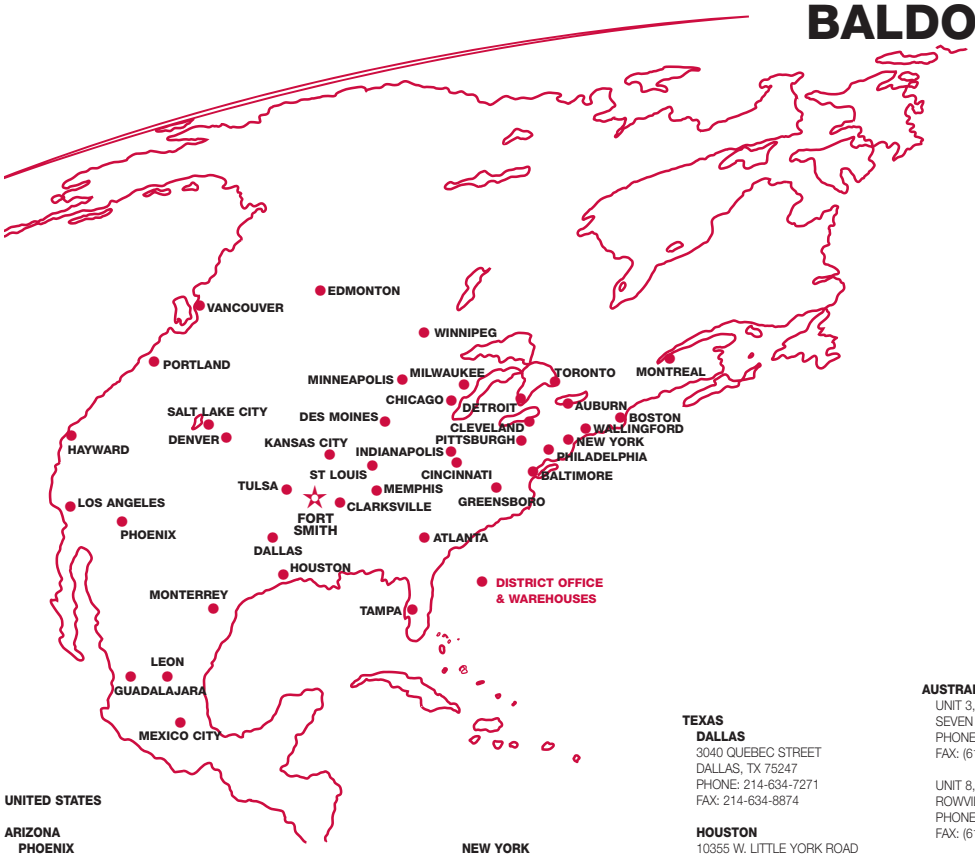

UNITED STATES

ARIZONA
PHOENIX
4211 S 43RD PLACE
PHOENIX, AZ 85040
PHONE: 602-470-0407
FAX: 602-470-0464

ARKANSAS
CLARKSVILLE
1001 COLLEGE AVENUE
CLARKSVILLE, AR 72830
PHONE: 479-754-9108
FAX: 479-754-9205

CALIFORNIA
LOS ANGELES
6480 FLOTILLA
COMMERCE, CA 90040
PHONE: 323-724-6771
FAX: 323-721-5859

HAYWARD
21056 FORBES AVENUE
HAYWARD, CA 94545
PHONE: 510-785-9900
FAX: 510-785-9910

COLORADO
DENVER
3855 FOREST STREET
DENVER, CO 80207
PHONE: 303-623-0127
FAX: 303-595-3772

CONNECTICUT
WALLINGFORD
65 SOUTH TURNPIKE ROAD
WALLINGFORD, CT 06492
PHONE: 203-269-1354
FAX: 203-269-5485

FLORIDA
TAMPA/PUERTO RICO/ VIRGIN ISLANDS
3906 EAST 11TH AVENUE
TAMPA, FL 33605
PHONE: 813-248-5078
FAX: 813-247-2984

GEORGIA
ATLANTA
62 TECHNOLOGY DRIVE
ALPHARETTA, GA 30005
PHONE: 770-772-7000
FAX: 770-772-7200

ILLINOIS
CHICAGO
4 SAMMONS COURT
BOLINGBROOK, IL 60440
PHONE: 630-296-1400
FAX: 630-226-9420

INDIANA
INDIANAPOLIS
5525 W. MINNESOTA STREET
INDIANAPOLIS, IN 46241
PHONE: 317-246-5100
FAX: 317-246-5110

IOWA
DES MOINES
1800 DIXON STREET, SUITE C
DES MOINES, IA 50316
PHONE: 515-263-6929
FAX: 515-263-6515

MARYLAND
BALTIMORE
6660 SANTA BARBARA RD.
SUITES 22-24
ELKRIDGE, MD 21075
PHONE: 410-579-2135
FAX: 410-579-2677

MASSACHUSETTS
BOSTON
6 PULLMAN STREET
WORCESTER, MA 01606
PHONE: 508-854-0708
FAX: 508-854-0291

MICHIGAN
DETROIT
5993 PROGRESS DRIVE
STERLING HEIGHTS, MI 48312
PHONE: 586-978-9800
FAX: 586-978-9969

MINNESOTA
MINNEAPOLIS
21080 134TH AVE. NORTH
ROGERS, MN 55374
PHONE: 763-428-3633
FAX: 763-428-4551

MISSOURI
ST LOUIS
422 INDUSTRIAL DRIVE
MARYLAND HEIGHTS, MO 63043
PHONE: 314-298-1800
FAX: 314-298-7660

KANSAS CITY
1501 BEDFORD AVENUE
NORTH KANSAS CITY, MO 64116
PHONE: 816-587-0272
FAX: 816-587-3735

NEW YORK
AUBURN
ONE ELLIS DRIVE
AUBURN, NY 13021
PHONE: 315-255-3403
FAX: 315-253-9923

NORTH CAROLINA
GREENSBORO
1220 ROTHERWOOD ROAD
GREENSBORO, NC 27406
PHONE: 336-272-6104
FAX: 336-273-6628

OHIO
CINCINNATI
2929 CRESCENTVILLE ROAD
WEST CHESTER, OH 45069
PHONE: 513-771-2600
FAX: 513-772-2219

CLEVELAND
8929 FREEWAY DRIVE
MACEDONIA, OH 44056
PHONE: 330-468-4777
FAX: 330-468-4778

OKLAHOMA
TULSA
7170 S. BRADEN, SUITE 140
TULSA, OK 74136
PHONE: 918-366-9320
FAX: 918-366-9338

OREGON
PORTLAND
20393 SW AVERY COURT
TUALATIN, OR 97062
PHONE: 503-691-9010
FAX: 503-691-9012

PENNSYLVANIA
PHILADELPHIA
1035 THOMAS BUSCH
MEMORIAL HIGHWAY
PENNSAUKEN, NJ 08110
PHONE: 856-661-1442
FAX: 856-663-6363

PITTSBURGH
159 PROMINENCE DRIVE
NEW KENSINGTON, PA 15068
PHONE: 724-889-0092
FAX: 724-889-0094

TENNESSEE
MEMPHIS
4000 WINCHESTER ROAD
MEMPHIS, TN 38118
PHONE: 901-365-2020
FAX: 901-365-3914

TEXAS
DALLAS
3040 QUEBEC STREET
DALLAS, TX 75247
PHONE: 214-634-7271
FAX: 214-634-8874

HOUSTON
10355 W. LITTLE YORK ROAD
SUITE 300
HOUSTON, TX 77041
PHONE: (281) 977-6500
FAX: (281) 977-6510

UTAH
SALT LAKE CITY
2230 SOUTH MAIN STREET
SALT LAKE CITY, UT 84115
PHONE: 801-832-0127
FAX: 801-832-8911

WISCONSIN
MILWAUKEE
1960 SOUTH CALHOUN ROAD
NEW BERLIN, WI 53151
PHONE: 262-784-5940
FAX: 262-784-1215

INTERNATIONAL SALES
FORT SMITH, AR
P.O. BOX 2400
FORT SMITH, AR 72902
PHONE: 479-646-4711
FAX: 479-648-5895

CANADA
EDMONTON, ALBERTA
4053-92 STREET
EDMONTON, ALBERTA T6E 6R8
PHONE: 780-434-4900
FAX: 780-438-2600

TORONTO
OAKVILLE, ONTARIO
2750 COVENTRY ROAD
OAKVILLE, ONTARIO L6H 6R1
PHONE: 905-829-3301
FAX: 905-829-3302

MONTREAL, QUEBEC
5155 RUE J.A. BOMBARDIER
SAINT-HUBERT, QUÉBEC
CANADA J3Z 1G4
PHONE: 514-933-2711
FAX: 514-933-8639

VANCOUVER, BRITISH COLUMBIA
1538 KEBET WAY
PORT COQUITLAM,
BRITISH COLUMBIA V3C 5M5
PHONE 604-421-2822
FAX: 604-421-3113

WINNIPEG, MANITOBA
54 PRINCESS STREET
WINNIPEG, MANITOBA R3B 1K2
PHONE: 204-942-5205
FAX: 204-956-4251

AUSTRALIA
UNIT 3, 6 STANTON ROAD
SEVEN HILLS, NSW 2147, AUSTRALIA
PHONE: (61) (2) 9674 5455
FAX: (61) (2) 9674 2495

UNIT 8, 5 KELLETTS ROAD
ROWVILLE, VICTORIA, 3178 AUSTRALIA
PHONE: (61) (3) 9753 4355
FAX: (61) (3) 9753 4366

EL SALVADOR
RESIDENCIAL PINARES DE SUIZA
POL. 15 #44,
NVA. SAN SALVADOR, EL SALVADOR
PHONE: +503 2288-1519
FAX: +503 2288-1518

CHILE
LUIS THAYER OJEDA 166,
OF 402 - PROVIDENCIA
SANTIAGO, CHILE
PHONE: +56 2 816 9900

CHINA
160 SONG SHENG ROAD
SONGJIANG INDUSTRY ZONE
SHANGHAI 201613, CHINA
PHONE: +86 21 5760 5335
FAX : +86 21 5760 5336

GERMANY
DIESELSTRASSE 22
D-85551 KIRCHHEIM
MUNICH, GERMANY
PHONE: +49 89 90 5080
FAX: +49 89 90 50 8492

INDIA
14, COMMERCE AVENUE
MAHAGANESH COLONY
PAUD ROAD
PUNE - 411038
MAHARASHTRA, INDIA
PHONE: +91 20 25 45 27 17 / 18
FAX: +91 20 25 45 27 19

INDONESIA
TALAVERA OFFICE PARK,
28TH FLOOR, SUITE M18
JI. T.B. SIMATUPANG, KAV. 22-26
JAKARTA 12430, INDONESIA
PHONE: +62 21 7599 9879
FAX: + 62 21 7599 9878

ITALY
BALDOR ASR AG
SUCCURSALE DI MENDRISIO
VIA BORROMINI, 20A
CH-6850 MENDRISIO
SWITZERLAND
PHONE: 0041 91 640 99 50
FAX: 0041 91 630 26 33

JAPAN
DIA BLDG 802,
2-21-1 TSURUYA-CHO,
KANAGAWA-KU
YOKOHAMA, 221-0835, JAPAN
PHONE: 81-45-412-4506
FAX: 81-45-412-4507

MEXICO
LEON, GUANAJUATO
KM. 2.0 BLVD. AEROPUERTO
LEÓN 37545, GUANAJUATO, MÉXICO
PHONE: +52 477 761 2030
FAX: +52 477 761 2010

MIDDLE EAST & NORTH AFRICA
VSE INTERNATIONAL CORP.
P. O. BOX 5618
BUFFALO GROVE, IL 60089-5618
PHONE: 847 590 5547
FAX: 847 590 5587

PANAMA
AVE. RICARDO J. ALFARO
EDIFICIO SUN TOWERS MALL
PISO 2, LOCAL 55
CIUDAD DE PANAMÁ, PANAMÁ
PHONE: +507 236-5155
FAX: +507 236-0591

SINGAPORE
18 KAKI BUKIT ROAD 3, #03-09
ENTREPRENEUR BUSINESS CENTRE
SINGAPORE 415978
PHONE: (65) 6744 2572
FAX: (65) 6747 1708

SWITZERLAND
POSTFACH 73
SCHUTZENSTRASSE 59
CH-8245 FEUERTHALEN
SWITZERLAND
PHONE: +41 52 647 4700
FAX: +41 52 659 2394

TAIWAN
1F, NO 126 WENSHAN 3RD STREET,
NANTUN DISTRICT,
TAICHUNG CITY 408
TAIWAN R.O.C
PHONE: (886) 4 238 04235
FAX: (886) 4 238 04463

UNITED KINGDOM
6 BRISTOL DISTRIBUTION PARK
HAWKLEY DRIVE
BRISTOL BS32 0BF U.K.
PHONE: +44 1454 850000
FAX: +44 1454 859001

VENEZUELA
AV. ROMA. QTA EL MILAGRO. URB.
CALIFORNIA NORTE
CARACAS, 1070
VENEZUELA
PHONE/FAX: +58 212 272 7343
MOBILE: +58 414 114 8623

BALDOR

BALDOR ELECTRIC COMPANY

World Headquarters • P.O. Box 2400 • Fort Smith, AR 72902-2400 U.S.A.
Ph: (479) 646-4711 • Fax (479) 648-5792 • International Fax (479) 648-5895 • www.baldor.com

© Baldor Electric Company
CA769

Printed in U.S.A.
12/09 TCP 30,000